PSD-A Series AC Servo Drive

PENTAXKALA.IR

User's Manual

Introduction

This manual describes the information required for the selection of PSD-A series AC servo drivers, the design of servo drivers, trial operation, adjustment, operation and maintenance. To correctly use the PSD-A series AC servo driver, please read this manual carefully.
Please take good care of this manual so that it can be read and referenced at any time when necessary.

How to use the manual

◆ The basic terminology used in this manual

The terms used in this manual are described below.

Basic terms	Meaning
Servo driver	PSD-A series servo driver
Servo motor	PSM-A series servo motors
Servo drive	Servo driver and servo motor combination
Servo system	A servo control system that includes the combination of a Servo Drive with a host controller and peripheral devices.
Servo ON	Supplying power to the motor.
Servo OFF	Not supplying power to the motor.
Servo lock	A state in which the motor is stopped and is in a position loop with a position reference of 0.
Main loop cable	Cables connected to main circuit terminals (main circuit power cable, control power cable, servo motor main circuit cable, etc.)

◆ Labeling of icons

The following icons are designed in this book to make readers understand the distinction between the contents of the commands. And use these icons where necessary.

Important	Indicates precautions and restrictions that must be observed. Meanwhile, it also indicates that an alarm will be raised, but it will not cause damage to the device.

Terminology explanation	Indicates the explaining of difficult terms and explaining the terms that have not been explained in advance.

Case — Indicates examples of operations or settings, etc.

Supplementary notes — Indicates additional items or information that is helpful to use after understanding.

PENTAXKALA.IR

Precautions for safety

◆ Safety-related warning signs

The following identification terms are used in this manual to explain matters to be observed in preventing casualties and equipment damage. Distinguish the hazards and damages caused by misoperation through identification terms. The contents are all important contents related to safety. Please observe them.

△,!Danger
• Indicates an emergency situation that is likely to result in death, serious injury and fire if not avoided.

△,!Warning
• Indicates a dangerous situation that may lead to death, serious injury and fire if not avoided.

△,!Notes
• Indicates a dangerous situation that may lead to moderate, minor injuries and fire if not avoided.

Notice
• Indicates a hazardous condition that may cause equipment damage if not avoided.

PENTAXKALA.IR

Table of contents

Chapter 1 Basic Information of Servo Drive 1
1.1 PSD-A Series AC Servo Driver 1
1.2 Distinguishing Method of Nameplate 1
1.3 Model Description 2
1.3.1 Servo drive model description example 2
Chapter 2 Selection of Servo Drive 3
2.1 Ratings and specifications 3
2.1.1 Rating value 3
2.1.2 Specification table 4
2.2 Overall dimensions of servo driver 5
Chapter 3 Installation of servo drive 7
3.1 Precautions for setting 7
3.2 Mounting Types and Orientation 7
3.3 Mounting hole dimensions 7
3.4 Installation interval 7
Chapter 4 Connection of Servo Unit 8
4.1 Wiring and Connecting precautions 8
4.1.1 General precautions 8
4.1.2 Anti-interference countermeasures 9
4.1.3 Grounding 12
4.2 Basic connection diagram 13
4.3 Power supply wiring for servo drive 13
4.3.1 Terminal symbol and terminal name 13
4.3.2 Wiring Operation Steps of Main Loop Connector 14
4.3.3 Power on sequence control 14
4.3.4 Power wiring diagram 15
4.3.5 Connection of Regenerative Resistance 15
4.4 Servo motor connection 16
4.4.1 Terminal symbol and terminal name 16
4.4.2 Pin Arrangement of Connector (CN2) for Encoder 16
4.4.3 Connection of Servo Drive and Encoder 16
4.4.4 Wiring of Servo Drive and Brake 17
4.5 Connection of input and output signals 18
4.5.1 Name and function of input/output signal connector (CN1) 18
4.5.2 Pin Arrangement of Input and Output Signal Connector (CN1) 18
4.5.3 Examples of wiring for input and output signals 19
4.5.4 Input-output loop 21
Chapter 5 Basic functions to be set before operation 23
5.1 Operation of Parameters (Pn□□□) 23
5.1.1 Classification of the parameter 23
5.1.2 Writing Method of Parameters 23
5.1.3 How to Set Parameters 24
5.1.4 Write inhibit setting of parameters 24
5.1.5 Initialization of parameter settings 24
5.2 Setting of Communication Specifications for MECHATROLINK-II 24
5.2.1 Communication specification setting 24
5.2.2 Station address setting 24
5.3 Setting of Communication Specifications for MECHATROLINK-III 24
5.3.1 Communication specification setting 24
5.3.2 Station address setting 25
5.4 Setting of EtherCAT communication specifications 25
5.4.1 Setting of Communication Specifications 25
5.4.2 Station address setting 25
5.5 Setting of Power Supply Types for Main Circuit and Control Circuit 25
5.5.1 Setting of AC Power Input/DC Power Input 25
5.5.2 Setting of Single-Phase AC Power Input/Three-Phase AC Power Input 26
5.6 Function and setting of servo ON input (/S-ON) signal 26
5.6.1 Function of servo ON input (/S-ON) signal 26
5.6.2 Set to Constant Servo ON (Motor Energized) 26
5.7 Setting of Motor Rotation Direction 26

5.8 Functions and settings of over-travel prevention 27
5.8.1 Overtravel signal 27
5.8.2 Select whether the over-travel prevention function is valid/invalid....28
5.8.3 Selection of Motor Stopping Method for Over-travel Prevention Function....28
5.8.4 Overtravel warning function....29
5.9 Brake 29
5.9.1 Action sequence of brake 30
5.9.2 Brake Control Output (/BK) Signal....30
5.9.3 Output Time of Brake Control Output (/BK) Signal when Servo Motor Stopped....31
5.9.4 Output Time of Brake Control Output (/BK) Signal in Servo Motor Rotation....31
5.10 Servo OFF and Motor Stop Method in Alarm....32
5.10.1 Motor Stop Method when Servo OFF....32
5.10.2 Motor stopping method when alarm occurs....32
5.11 Motor overload detection value....33
5.11.1 Detection time of overload warning (A.910)....33
5.11.2 Detection time of overload alarm (A.720) 34
5.12 Setting of Electronic Gear....34
5.12.1 Setting of Electronic Gear Ratio 34
5.12.2 Setting Examples of Electronic Gear Ratio 35
5.13 Setting of Absolute Value Encoder 35
5.13.1 Precautions in Setting (Initializing) 35
5.13.2 Confirmation before execution....36
5.13.3 Operable tool....36
5.14 Setting of Regenerative Resistance Capacity 36
Chapter 6 Application function....37
6.1 Distribution of input and output signals....37
6.1.1 Distribution of input signals 37
6.1.2 Distribution of output signals 38
6.1.3 Servo Alarm Output (ALM) Signal 38
6.1.4 Warning output (/WARN) signal....38
6.1.5 Rotation detection output (/TGON) signal 38
6.1.6 Ready output (/S-RDY) signal 39
6.1.7 Speed consistent output (/V-CMP) signal....39
6.1.8 Positioning Completion (/COIN) Signal 40
6.1.9 Position nearby output (/NEAR) signal 40
6.1.10 Speed limit function during torque control 41
6.2 Operation for Momentary Power Interruptions....42
6.3 SEMI F47 Specification Support Function 42
6.4 Setting of Maximum Speed of Motor 44
6.5 Encoder frequency division pulse output....44
6.5.1 Signal output by encoder frequency division pulse....44
6.5.2 Setting of Encoder frequency division pulse output....45
6.6 Soft limit function 47
6.6.1 The valid/invalid choice of soft limit function....47
6.6.2 Setting of soft limit value 47
6.6.3 Carry out soft limit check according to commands 47
6.7 Selection of torque limit 47
6.7.1 Internal torque limit....49
6.7.2 Exterior torque limit 49
6.7.3 Torque limit detection output (/CLT) signal 50
6.8 Absolute position 50
6.9 Forced stop function....51
6.9.1 Forced Stop Input (FSTP) Signal 51
6.9.2 Selection of Stop Method for Forced Stop Function....51
6.9.3 Methods of Recovery from Compulsory Stop....52
Chapter 7 Trial operation....53
7.1 Commissioning process 53
7.1.1 Process of servo motor test run....53
7.2 Inspection and Precautions Before Commissioning 53
7.3 Commissioning of Servo Motor Unit 53
7.3.1 Confirmation before execution....53
7.3.2 Operable tool....54
Chapter 8 Panel Display and Use of Panel Operators....55

8.1 Panel operator 55
8.1.1 Name and function of panel operator keys 55
8.1.2 Switching of functions 55
8.1.3 Status display mode 57
8.2 Operation of Parameters (PA□□□) in Panel Operator 58
8.2.1 Setting Method of "Numerical Setting Type" 58
8.2.2 Setting Method of "Function Selection Type" 59
8.3 The operation of the monitor display (Un□□□) in the panel operator 59
8.3.1 Basic operation of monitoring display 60
8.3.2 Monitoring of input and output signals (Un005/ Un006) 60
8.4 Operation of Auxiliary Function (FA□□□) in Panel Operator 61
8.4.1 Display of alarm records (FA000) 61
8.4.2 JOG operation (FA002) 61
8.4.3 Origin search (FA003) 62
8.4.4 Program JOG run (FA004) 62
8.4.5 Initialization of parameter settings (FA005) 63
8.4.6 Deletion of Alarm records (FA006) 63
8.4.7 Absolute value encoder Setup（initialization）（FA008） 63
8.4.8 Automatic Adjustment of Analog (Speed and Torque) Command Bias (FA009) 64
8.4.9 Manual Adjustment of Speed Command Bias (FA00A) 64
8.4.10 Manual Adjustment of Torque Command Bias (FA00B) 64
8.4.11 Automatic Adjustment of Offset of Motor Current Detection Signal（FA00E） 65
8.4.12 Write inhibit setting of parameters（FA010） 65
8.4.13 Displays the motor model (FA011) 65
8.4.14 Display software version (FA012) 66
8.4.15 Single parameter adjustment (FA203) 66
8.4.16 EasyFFT（Fn206） 67
8.4.17 Load Inertia/Mass Detection (FA208) 68
Chapter 9 Maintenance 69
9.1 Inspection and component replacement 69
9.1.1 Inspection 69
9.1.2 Battery Replacement 69
9.2 Alarm display 70
9.2.1 Warning list 70
9.2.2 Cause of Alarm and Treatment Measures 72
9.2.3 Alarm reset 78
9.2.4 Display of alarm records 78
9.2.5 Deletion of Alarm records 78
9.3 When warning is displayed 78
9.3.1 Warning list 78
9.3.2 Reasons for Warning and Countermeasures 80
9.4 Monitoring of communication data when alarms and warnings occur 81
9.5 The fault causes and treatment measures can be judged from the actions and states of servo motors 81
Chapter 10 List of parameter 85
10.1 List of servo parameters 85
10.1.1 Method for distinguishing the list 85
10.1.2 List of servo parameters 86
Chapter 11 Operation of Debugging Software (iWatch+) 113
11.1 Connection and login of iWath+ debugging software 113
11.2 Automatic adjustment (no upper command) 113
Motor code is written to encoder EEROM operation（FA301） 116
Motor zero position check and reset operation （FA300） 117

Chapter 1 Basic Information of Servo Drive

1.1 PSD-A Series AC Servo Driver

PSD-A series servo drive is mainly used for occasions requiring "high speed, high frequency and high positioning accuracy". The servo drive can maximize the performance of the machine in the shortest possible time and help to improve production efficiency.

PSD-A series servo drivers include single-axis PSD-A -ES（BS） series servo drivers and double-axis PSD-A -EW（BW）series servo drivers.

1.2 Distinguishing Method of Nameplate

The basic information marked on the drive nameplate is shown in the following figure.

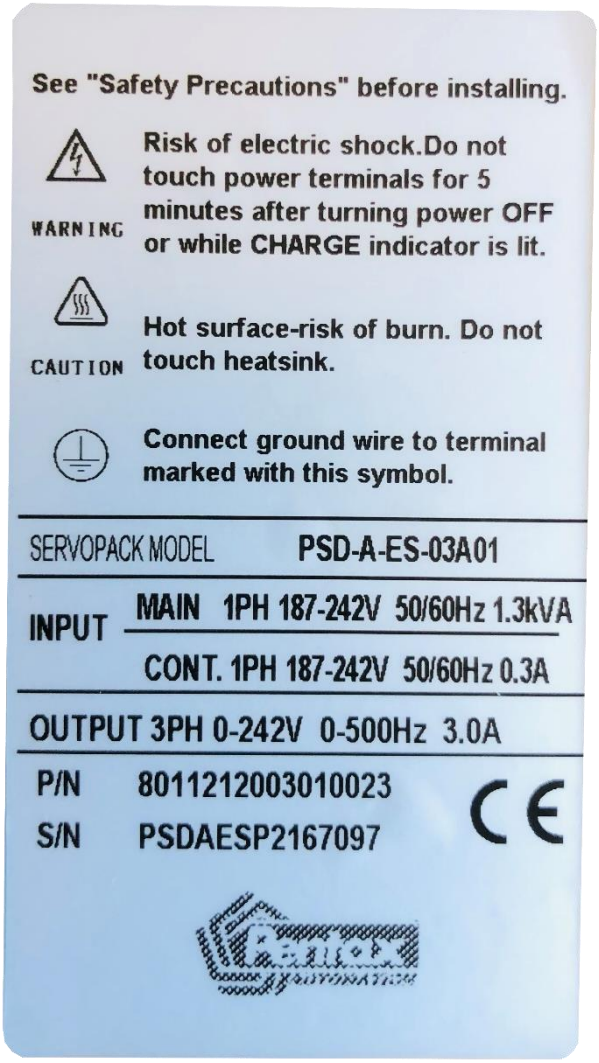

PENTAXKALA.IR

1.3 Model Description

1.3.1 Servo drive model description example

■ Three-phase 220VAC

PSD-A	–	ES	–	10	A	00
PSD-A Series		Axis Number		Continuous Output Current	Power Supply Voltage	Interface Type

Axis Number		Contionous Output Current		Power Supply Voltage		Interface Type	
S	Single Axis	03	3.0 A	A	220VAC	00	Analog (standard resolution)/Pulse
		06	6.5 A				
		08	8.5 A			01	CANopen Communications
W	Double Axis	10	10.5 A			05	Analog (high resolution)/Pulse
		12	12 A			10	MECHATROLINK-II Communications
		16	16A			20	MECHATROLINK-III Communications
		25	25 A			30	EtherCAT Communications

* The maximum specification of continuous output current for biaxial drive is 10.
* For EtherCAT/MII/MII models, AI and most of DI/DO is not available, for DI, only POT/NOT works, For DO, brake works.

■ Three-phase 380VAC

PSD-A	--	ES	–	15	D	00
PSD-A Series		Axis Number		Continuous Output Current	Power Supply Voltage	Interface Type

Axis Number		Contionous Output Current		Power Supply Voltage		Interface Type	
S	Single Axis	15	15 A	D	380VAC	00	Analog (standard resolution)/Pulse
		21	21 A				
		28	28 A			01	CANopen Communications
		40	40 A			05	Analog (high resolution)/Pulse
						10	MECHATROLINK-II Communications
						20	MECHATROLINK-III Communications
						30	EtherCAT Communications

* The maximum specification of continuous output current for biaxial drive is 10.
* For EtherCAT/MII/MII models, AI and most of DI/DO is not available, for DI, only POT/NOT works, For DO, brake works.

* Servo motor model commands refer to the current product selection sample book

PENTAXKALA.IR

Chapter 2 Selection of Servo Drive

2.1 Ratings and specifications

2.1.1 Rating value

■ Three-phase 220VAC

Model			03A□□	06A□□	08A□□	10A□□	12A□□	16A□□	25A□□
Continuous Output Current[Arms]			3	6.1	8.5	10	12	16.0	25.0
Instantaneous Max. Output Current [Arms]			10.6	14.1	21.2	24.8	29.7	49.5	63.6
Main Circuit	Power Supply		AC220V，-15% to +10%, 50 Hz / 60 Hz						
	Input Current[Arms]		1.9 (5.1)	3.9 (10.3)	5.4 (14.3)	6.3 (16.8)	7.6	10.1	15.7
Control Power Supply			AC220 V， -15% to +10%, 50 Hz / 60 Hz						
Power Supply Capacity*[kVA]			0.9 (2.1)	1.7 (4.2)	2.4 (5.8)	2.8（6.8）	3.4	4.0	5.9
Regenerative Resistor	Built-In Regenerative Resistor	Resistance[Ω]	——	40	20	20	20	12	20
		Capacity[W]	——	80	80	80	80	150	120
	Minimum Allowable External Resistance[Ω]		40	20	15	15	15	15	10
Overvoltage Category			III						

■ Three-phase 380VAC

Model No.			15D□□	21D□□	28D□□	40D□□
Continuous output current [Arms]			15	21	28	40
Maximum instantaneous output current [Arms]			35.3	44.1	58.9	88.3
Main power supply	Input power requirements		AC30V，-15% ～ +10%, 50 Hz / 60 Hz			
	Input current [Arms]		8.6	14.5	21.7	31.8
Input control power requirements			15D/21D： DC 24V，-10% ～ +10%； 28D/40D： AC380V			
Input power capacity [kVA]			7.1	11.7	14.4	21.9
Regenerative resistor	Built-in regenerative resistor	Resistance [Ω]	32	23	-	-
		Power [W]	150	150	-	-
	Minimum allowable external resistance [Ω]		32	32	23	16
Overvoltage category			III			

PENTAXKALA.IR

2.1.2 Specification table

Item		Specifications
Control model		Position control, JOG operation, Speed contacts, etc.
Encoder feedback		Serial data encoder: 17-bit or 23-bit (single or multiple turns)
Conditions of use	Operating ambient temperature/storage temperature	Operating ambient temperature: 0~+50℃, storage temperature: -20~+85℃
	Ambient humidity/storage humidity	Below 90%RH (no freezing or condensation)
	Vibration/impact strength	4.9m/s^2 / 19.6m/s^2
Structure		Base mounting type
Performance	Speed control range	1:10000 (the lower limit of the speed control range is stable operation without crawling under rated load)
	Speed response	3.1KHz
	Speed Volatility (Load Change)	0 ~ 100% load: Under ±0.01%(at rated speed)
	Velocity fluctuation rate (voltage change)	Rated voltage ±10%: 0% (at rated speed)
	Velocity fluctuation rate (temperature change)	25±25℃：Below ±0.1%（at rated speed）
Analog speed command input	Command voltage	DC±10V
	Input impedance	Around 20KΩ
	Circuit time parameter	47μs
Analog torque command input	Command voltage	DC±10V
	Input impedance	Around 20KΩ
	Circuit time parameter	47μs
Sequential control input signal	Point	8 points
	Function (assignable)	Servo ON (/S-ON), P action (/P-CON), prohibition of forward rotation side drive (P-OT), prohibition of reverse rotation side drive (N-OT), alarm reset (/ALM-RST), forward rotation side torque limit (/P-CL), reverse rotation side torque limit (/N-CL), position deviation reset (/CLR), internal set speed switching, etc. Distribution of the above signals and change of positive/negative logic can be performed
Sequential control output signal	Point	6 points
	Function (assignable)	Servo Alarm (ALM), Positioning Complete (/COIN), Speed Consistent Detection (/V-CMP), Servo Motor Rotation Detection (/TGON), Servo Ready (/S-RDY), Torque Limit Detection (/CLT), Brake (/BK), Encoder Zero Output (PGC) Distribution of the above signals and change of positive/negative logic can be performed
Encoder frequency division pulse output		Phase A, phase B, phase C: linear drive output; Frequency division pulse number: can be arbitrarily set
RS-485 communication	Communication protocol	MODBUS
	1: N communication	The maximum can be N = 127 stops.
	Axis address setting	Through parameter setting
CAN communication	Communication protocol	CANOpen (DS301+DS402 line gauge)
	1: N communication	The maximum can be N = 127 stops.
	Axis address setting	Through parameter setting
MECHATROLINK-Ⅱ Bus	Communication protocol	MECHATROLINK-II
	Set slave address	41 to 5F (hexadecimal) (maximum number of slave stations supported: 30), via parameter setting
	Baud rate	10 Mbps, 4 Mbps, via parameter setting
	Transmission period	250 microseconds or 0.5 milliseconds to 4.0 milliseconds (multiples of 0.5 milliseconds)
	Number of bytes transferred	There are 17 or 32 bytes for each site and the same is set by parameters
MECHATROLINK-Ⅲ Bus	Communication protocol	MECHATROLINK-III
	Set slave address	03 to EF (hexadecimal) (maximum number of slave stations supported: 62), via parameter setting
	Baud rate	100 Mbps
	Transmission period	250 microseconds, 500 microseconds, 750 microseconds, or 1.0 milliseconds to 4.0 milliseconds (multiples of 0.5 milliseconds)
	Number of bytes transferred	There are 16, 32 or 48 bytes for each site and the same is set by parameters
EtherCAT bus	Communication protocol	CoE (CANOpen over EtherCAT)
	Control model	csp, pp, hm, csv, cst, pv, tq
	Zero return mode	1-14, 17-30, 33, 34, 35, 37
	Synchronization mode	DC, SM2, FreeRun
	Minimum command cycle	125 μs
Display function		CHARGE Indicator, 7-segment Digital Tube 5-bit
Regeneration treatment		Internal Regenerative Resistor or External Regenerative Resistor (Optional)
Overtravel (OT) prevention function		Dynamic brake (DB) stops, deceleration stops or free running stops when P-OT and N-OT input actions are performed.
Protection function		Overcurrent, overvoltage, undervoltage, overload, overspeed, regeneration fault, encoder feedback error, etc.
Monitoring function		Revolving speed, current position, command pulse accumulation, position deviation, motor current, running state, input and output signals, etc.
Auxiliary function		Gain adjustment, alarm recording, JOG operation, origin search, inertia detection, etc.
Intelligent function		Built-in Gain Auto Tuning
Applicable load inertia		Less than 5 times of motor inertia
Position control	Feedforward compensation	0 ~ 100% (set unit 1%)
	Type of input pulse	Symbol+pulse sequence, CW+CCW pulse sequence, 90 °phase difference two-phase pulse (phase A+phase B)
	Input pulse form	Support linear drive, open collector
	Maximum input pulse frequency	• Linear drive Symbol+pulse sequence, CW+CCW pulse sequence: 500K pps 90° phase difference two-phase pulse (phase A+phase B): 500K pps • Open collector Symbol+pulse sequence, CW+CCW pulse sequence: 200K pps 90° phase difference two-phase pulse (phase A+phase B): 200K pps

2.2 Overall dimensions of servo driver

◆ PSD-A -03 A □□

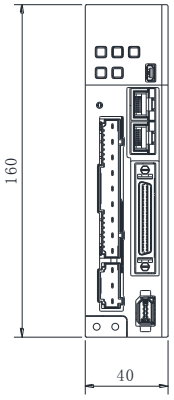

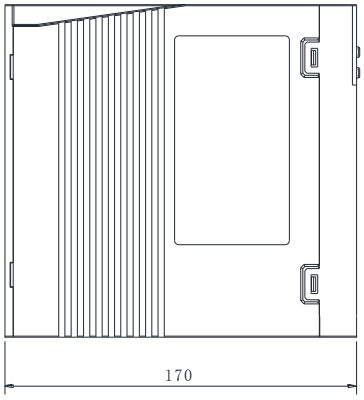

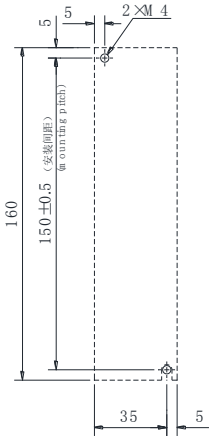

Unit:mm

Mounting Hole Diagram

◆ PSD-A -06 A □□

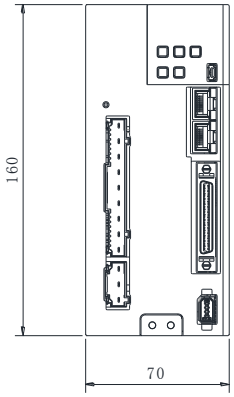

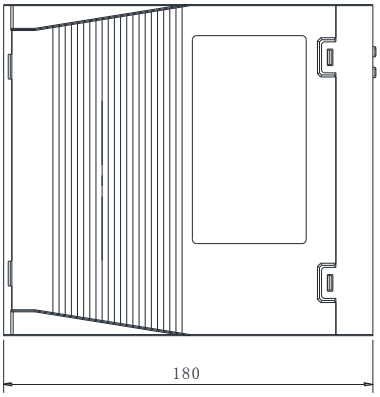

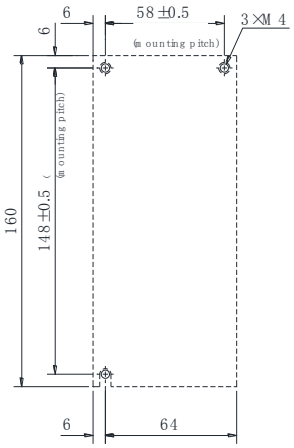

Unit:mm

Mounting Hole Diagram

◆ PSD-A -10 A □□

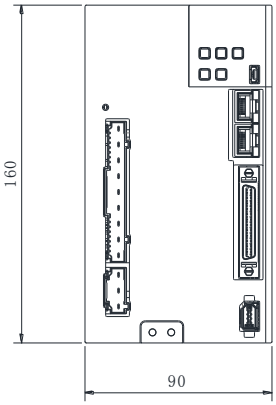

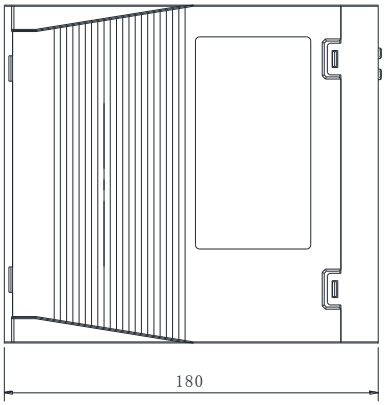

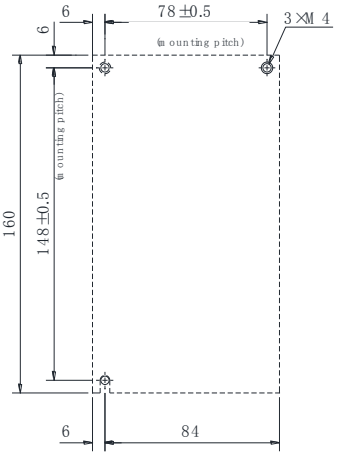

Unit:mm

Mounting Hole Diagram

◆ PSD-A -03/06/10 A □□

PENTAXKALA.IR

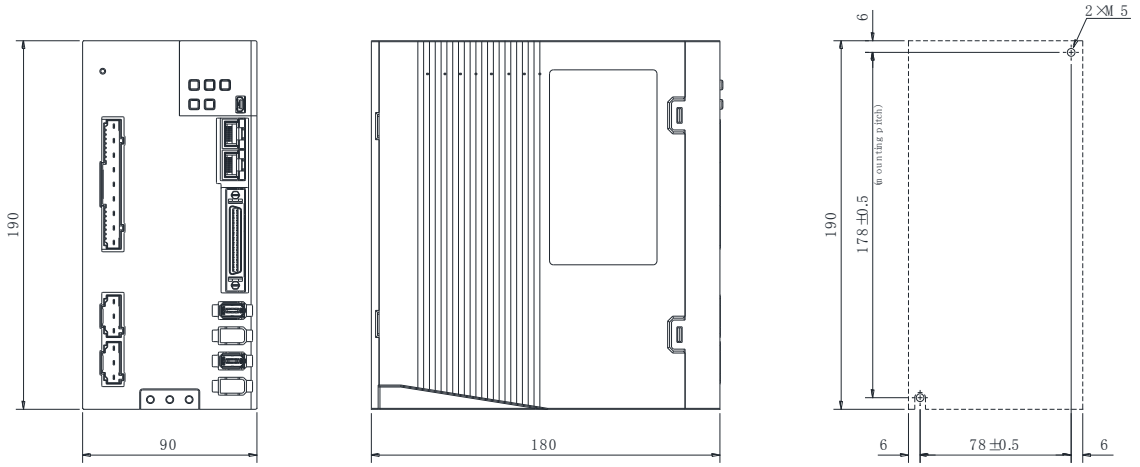

Unit:mm

Mounting Hole Diagram

◆ PSD-A -16A□□/PSD-A DS-25A□□ PSD-A -15D□□/PSD-A -21D□□

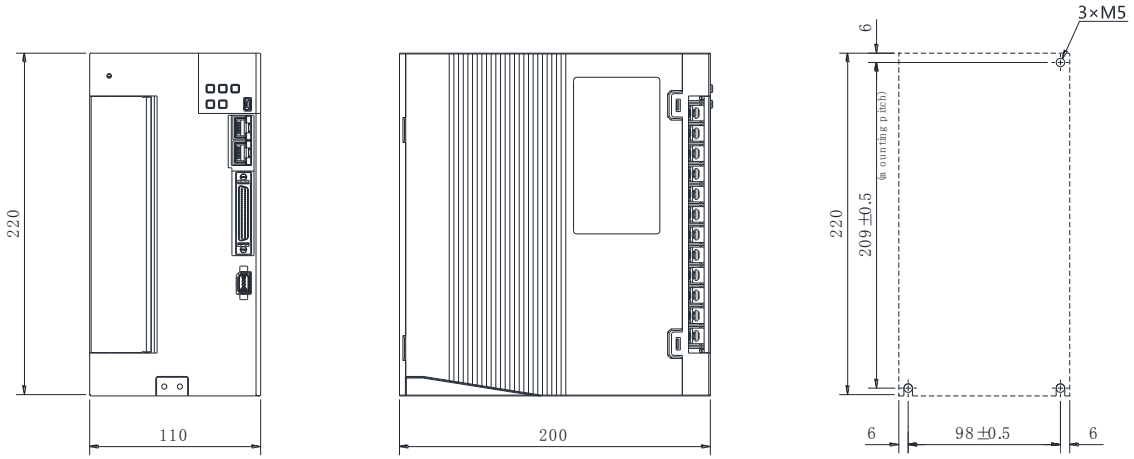

Unit:mm

Mounting Hole Diagram

◆ PSD-A -28D□□/PSD-A -40D□□

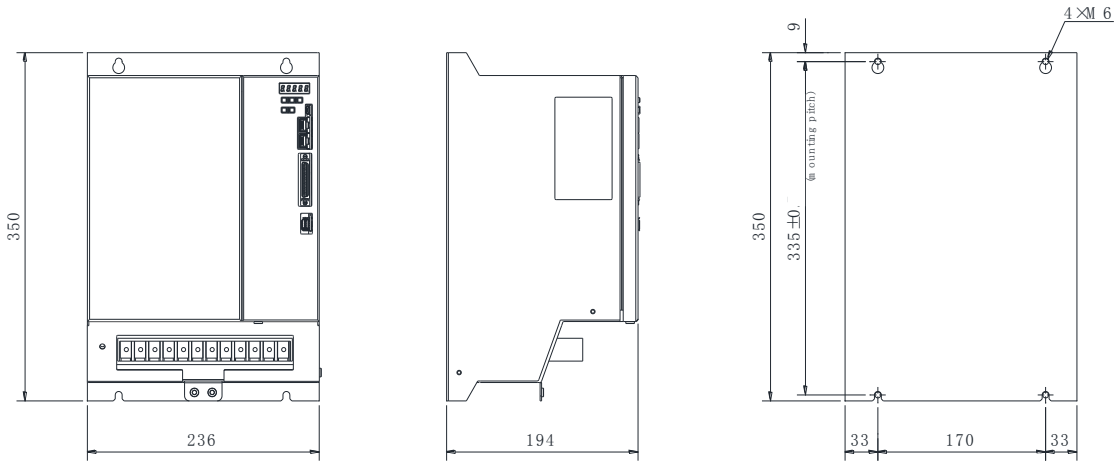

Unit:mm

Mounting Hole Diagram

PENTAXKALA.IR

Chapter 3 Installation of servo drive

3.1 Precautions for setting

For the set environmental conditions, please refer to the following.
2.1.2 Specifications
■ When installed near the heating element
To make the temperature around the servo drive conform to the environmental conditions, please control the temperature rise caused by the heat radiation or convection of the heating element.
■ When installed near a vibration source
Please install anti-vibration equipment on the installation surface of servo drive to prevent vibration from being transmitted to servo drive.
■ Other
Do not set it in hot and humid places, places with water droplets or cutting oil splashing, places with more dust or iron powder in ambient gas, places with corrosive gas and radiation fields.

3.2 Mounting Types and Orientation

The servo driver can be installed in various ways, but in any case, the servo driver must be installed in the vertical direction, as shown in the right figure.

In addition, please make the front surface (panel display part) of servo drive face the operator for installation.

(Note) Please firmly fix the servo drive on the mounting surface through 2 ~ 4 mounting holes (the number of mounting holes varies according to the capacity).

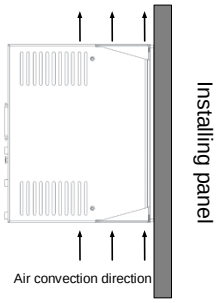

3.3 Mounting hole dimensions

Please use the mounting hole to firmly fix the servo drive on the mounting surface.

Please refer to 2.3 outline dimensions of servo drive for specific installation dimensions.

(Note) During installation, please prepare a screwdriver with a length greater than the depth of servo drive.

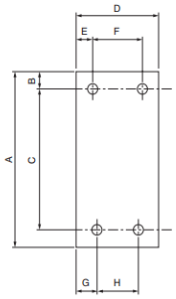

3.4 Installation interval

Please ensure that the following intervals are left around the servo drive.

Important	To prevent the ambient temperature of the servo drive from rising locally, please set a cooling fan on the upper part of the servo drive. In addition, please refer to the figure below to leave enough space in order to make use of fans and natural convection to cool the servo drive.

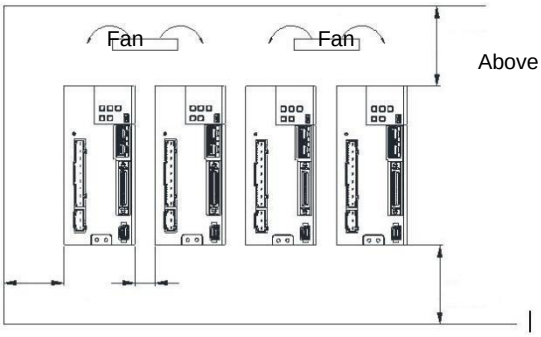

PENTAXKALA.IR

Chapter 4 Connection of Servo Unit

4.1 Wiring and connecting precautions

4.1.1 General precautions

△,!Danger

- Do not change the wiring during power-on.
  Otherwise, it will lead to electric shock or injury.

△,!Warning

- Please be connected or checked by professional technicians.
  Otherwise, it will lead to electric shock or product failure.
- Please carefully confirm the wiring and power supply.
  The output circuit may be short-circuited due to wrong wiring and application of abnormal voltage. Mechanical damage or casualties caused by the above failures.
- Please connect with designated terminals when AC power supply and DC power supply are connected with servo drive.
  • AC power supply should be connected to L1/L2/L3 terminal and L1C/L2C terminal of servo drive.
  • Please connect DC power supply with B1/⊕ terminal and terminal ⊖of servo drive, L1C/L2C.
  Failure to do so may result in failure or fire.
- Please connect the external dynamic brake resistor conforming to the specifications of machinery and devices with the designated terminal when the servo drive uses the external dynamic brake option. Otherwise, unexpected actions will be caused during emergency stop, causing equipment damage, burning damage and personal injury.

△,!Notes

- Please confirm that the (CHARGE) lamp is off after the power supply is turned off for at least 5 minutes, and then conduct wiring and inspection. Even if the power supply is turned off, high voltage may still remain inside the servo drive. Therefore, do not touch the power terminal while the (CHARGE) lamp is on.
  Otherwise, it will lead to electric shock.
- Please follow the precautions and procedures recorded in this manual for wiring and trial operation.
  Servo drive failure caused by wrong wiring of brake circuit and application of abnormal voltage may lead to mechanical damage or casualties.
- Please wire correctly and reliably.
  The connector and the pin arrangement of the connector vary depending on the model. Please be sure to confirm the pin arrangement through the technical data of the model used.
  Otherwise, it will lead to product failure or misoperation.
- Please be sure to tighten and effectively connect the wires of the power supply terminal and the motor connection terminal according to the specified method and torque. If it is not tightened sufficiently, the wires and terminal blocks will heat up and cause fire due to poor contact.
- For input and output signal cables and encoder cables, please use shielded double stranded wires or multi-core double stranded integrated shielded wires.
- When wiring the main loop terminal of servo drive, please observe the following precautions.
  • After all wiring including the main loop terminals is completed, the servo drive power supply is switched on.
  • When the main circuit terminal is of connector type, please remove the connector from the servo drive body and wire again.
  • Only one wire can be inserted into one wire socket of the main circuit terminal.
  • When inserting wires, do not make burrs of core wires contact with adjacent wires to cause short circuit.
- Please set up safety devices such as circuit breakers for wiring to prevent external wiring from short-circuiting.
  Otherwise, it will lead to fire or failure.

△,!Notice
• Please use the cables designated by our Company as far as possible when connecting. Please confirm the rated current and operating environment of the model when using cables other than those specified by our Company. Use the wiring materials designated by the Company or equivalent products. • Please tighten the fixing screw and locking mechanism of cable connector. If the fastening is not sufficient, the cable connector may fall off during operation. • Do not use the same sleeve for high-voltage wires (main loop cables) and low-voltage wires (cables for input and output signals and encoder cables), nor tie them together. Please keep a spacing of more than 30cm when wiring when not placing strong and weak current wires into separate bushings. It will cause misoperation due to interference of weak current wires if it is too close. • Please install the battery on either side of the upper device or encoder cable. If batteries are installed on the upper device and encoder cable at the same time, a circulation loop will be formed between the batteries, resulting in product damage or burning. • Pay attention to the polarity when connecting the battery. Battery rupture can cause encoder failure.

△,!Important
• Please use circuit breakers or fuses for wiring to protect the main circuit. The servo drive is directly connected to a commercial power supply without using transformers or the like for insulation. To prevent the servo system from being mixed with the outside world, be sure to use circuit breakers or fuses for wiring. • Please set the leakage breaker. Servo drive has no built-in ground short circuit protection loop. To build a safer system, please configure the earth leakage breaker for overload and short circuit protection, or install the earth leakage breaker for short circuit protection in combination with the circuit breaker for wiring. • Please avoid frequently turning ON/OFF the power supply. • Frequent ON/OFF power supply will lead to aging of internal components of servo drive, so do not frequently ON/OFF power supply except for necessary applications. • The power ON/OFF interval should be more than 1 hour (roughly standard) after starting the actual operation (normal operation).

Please observe the following precautions when wiring to use the servo system safely and stably.

- Please use standard cables for each connecting cable. In addition, when designing and configuring the system, please shorten the cable as much as possible.
- Please be careful not to bend or tighten it when the core diameter of signal cable is less than 0.3 mm^2.

4.1.2 Anti-interference countermeasures

Important	No anti-radio interference measures have been taken since the servo drive is industrial equipment. The peripheral equipment may be affected by switching interference since the servo-driven main circuit uses high-speed switching elements. Please take anti-interference measures when using near residential buildings or when you are worried about radio interference.

The servo drive is internally provided with a microprocessor. Therefore, it may be affected by noise from servo-driven peripheral equipment.

To suppress the noise interference between servo drive and peripheral equipment, the following anti-interference countermeasures can be taken as required.

- Please set the input command equipment and noise filter as close to the servo drive as possible.
- Be sure to connect surge absorbers to the coils of relays, solenoid valves and electromagnetic contactors.
- Please do not put the following cables into the same sleeve or tie them together. In addition, please keep an interval of more than 30cm when wiring.
  - Main loop cable and cable for input and output signals
  - Main loop cable and encoder cable
- Do not use the same power source as electric welding machine, electric spark machine, etc. Even if it is not the same power supply, when there is a high frequency generator nearby, please connect the noise filter at the input side of the main loop power cable and the control power cable.
- Please carry out proper grounding treatment.

Noise filter

Connect the interference filter at an appropriate place to avoid the adverse effect of interference on servo drive.

The following is an example of wiring considering anti-interference measures.

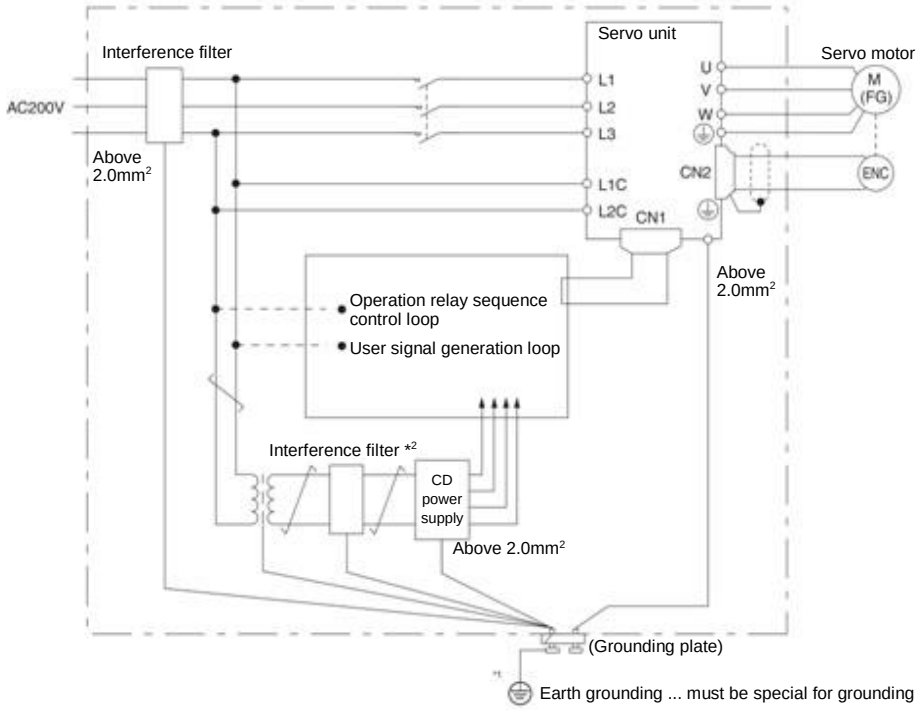

*1. Please try to use a thick wire of more than 2.0 mm^2 for grounding (flat braided copper wire is more suitable).

*2. Please try to use double stranded wires for connection.

Noise Filter Wiring and Connection Precautions

Please observe the following precautions when wiring and connecting interference filters.

- Please separate the input wiring from the output wiring. In addition, do not put the input and output wires into the same sleeve, nor bind them together.

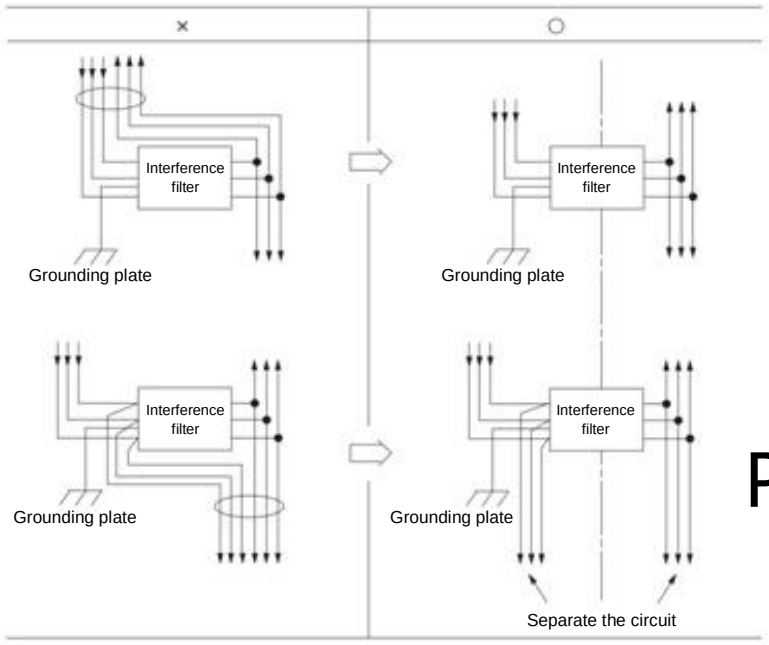

PENTAXKALA.IR

• Please set the ground wire of interference filter separately from the output wire. In addition, the ground wire should not use the same sleeve as the output wiring of the interference filter and other signal wires, nor should it be tied together.

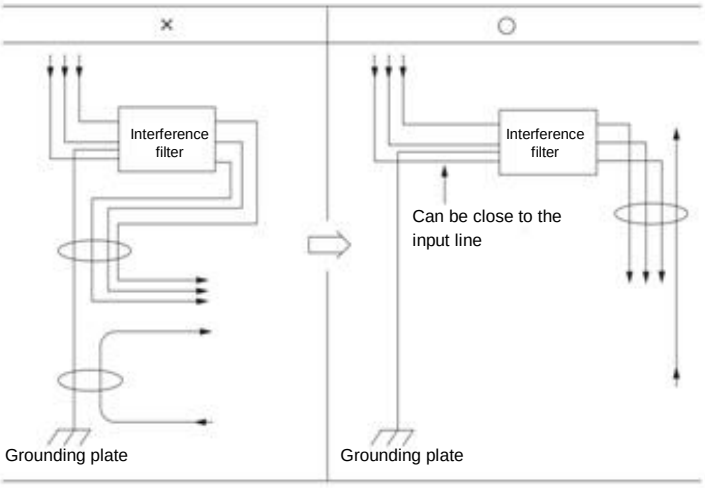

• Connect the ground wire of the interference filter to the ground plate separately. Do not connect other ground wires.

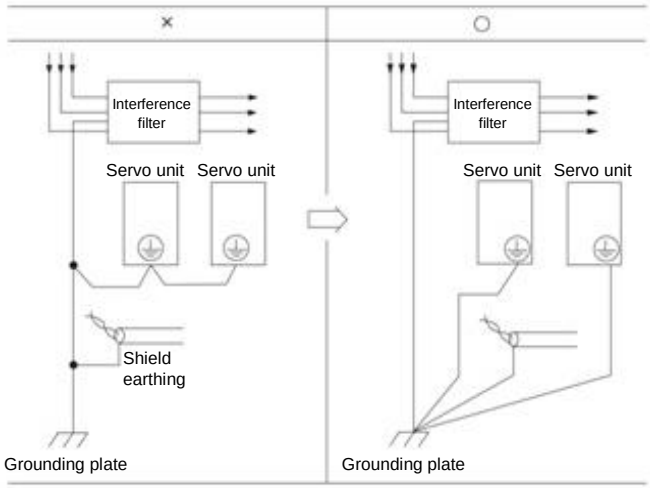

PENTAXKALA.IR

• Please connect the ground wire of this filter and the ground wire of other equipment in the control cabinet to the ground plate of the control cabinet when there is an interference filter inside the control cabinet, and then connect to the ground.

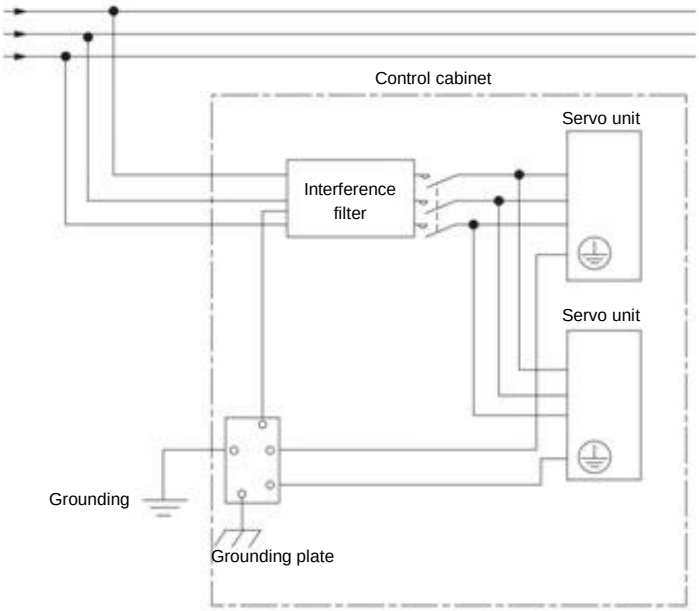

4.1.3 Grounding

Please follow the following for grounding treatment. If proper grounding treatment is adopted, misoperation caused by interference can also be prevented.

When connecting the grounding cable, please pay attention to the following points:
• Please use the grounding above Class D (grounding resistance below 100Ω).
• One point must be grounded.
• When the servo motor and the machine are insulated from each other, please directly ground the servo motor.

Grounding of motor housing or motor

The switch interference current will flow out from the servo drive main loop through the floating capacitor of the servo motor when the servo motor is mechanically grounded. Please be sure to connect the motor housing terminal (FG) or ground terminal (FG) of the servo motor with the ground terminal of the servo drive in order to prevent this phenomenon. In addition, the ground terminal"⏚" must be grounded.

When noise occurs in cables for input and output signals

Please connect the shielded wire of the cable for input and output signals to the connector housing before grounding when interference occurs in the cable for input and output signals. The metal sleeve and the grounding box are grounded at a single point when the main loop cable of the servo motor is sheathed with a metal tube.

4.2 Basic connection diagram

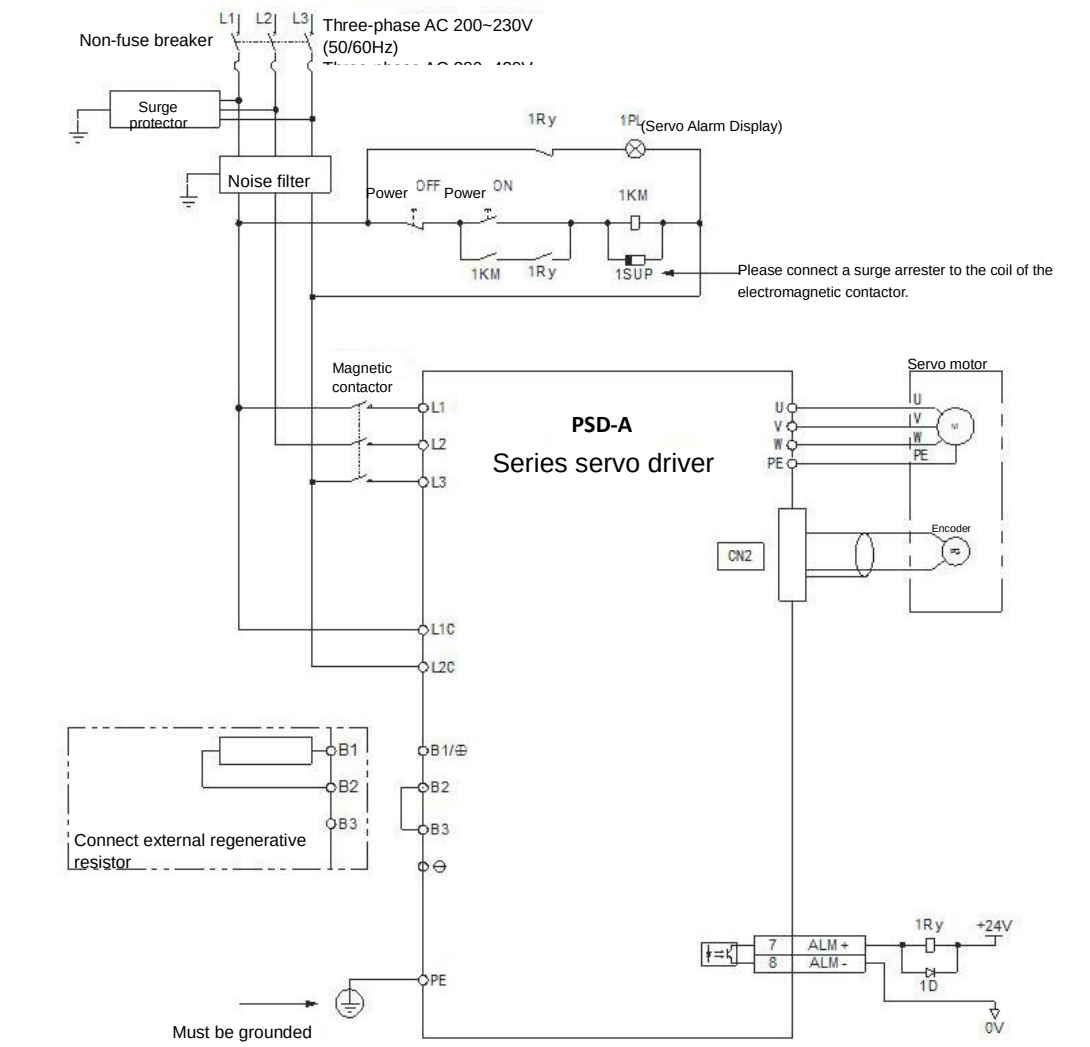

4.3 Power supply wiring for servo drive

4.3.1 Terminal symbol and terminal name

The connection of servo-driven main circuit power supply and control circuit power supply uses servo-driven main circuit connector or terminal strip.

△,!Warning
Please refer to the following table and the description in the reference section for correct wiring. Incorrect wiring will lead to servo drive failure and fire.

The main loop power input specifications for servo drive are as follows:

■ Single phase/three phase AC220V power input

Terminal symbol	Terminal name	Specifications
L1, L2, L3	Main circuit power supply input terminal for AC power supply input	Three phase AC 200V～240V，-15%～+10%，50/60Hz Single phase AC 200V ~ 240V,-15% ~+10%, 50/60Hz
L1C, L2C	Control power terminal	Single phase AC 200V ~ 240V,-15% ~+10%, 50/60Hz
B1/⊕、B2、B3	Regenerative resistor connection terminal	Remove the short wire or short piece between B2-B3 when the regeneration capacity is insufficient and connect the external regeneration resistor between B1/⊗ and B2. Please purchase an external regenerative resistor separately.
⊖	-	None (Do not connect it to the terminals.)

■ Three phase AC380V power input

Terminal symbol	Terminal name	Specifications
L1, L2, L3	Main circuit power supply input terminal for AC power supply input	Three phase AC 380V～420V，-15%～+10%，50/60Hz
L1C, L2C	Control power supply terminal	15D/21D： DC 24V，-10% ～ +10%； 28D/40D： AC380V
B1/⊕、B2、B3	Regenerative resistor connection terminal	PSD-A DS-15D□□, PSD-A DS-21D□□, Remove the short wire or short piece between B2-B3 when the regeneration capacity is insufficient and connect the external regeneration resistor between B1/⊗ and B2. Please purchase an external regenerative resistor separately.
		PSD-A DS-28D□□ and PSD-A DS-40D□□ no built-in regenerative resistor, and cannot be shorted between B2 and B3. External regenerative resistor shall be connected between B1/⊗ and B2. Please purchase an external regenerative resistor separately.
⊖	-	None (Do not connect it to the terminals.)

4.3.2 Wiring Operation Steps of Main Loop Connector

• Prepare items

Prepare items	Remarks
Spring opener or Slotted screwdriver	• Spring opener Servo drive appurtenances
	• Slotted screwdriver Commercial products with cutting edge width of 3.0mm-3.5mm

1. Remove the main circuit connector and motor connector from the servo drive.

2. Peel off the cladding of the used wires.

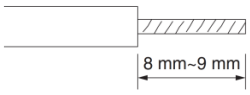

3. Use a tool to open the wire insertion part of the terminal connector. There are two methods of opening. You can choose any of them.

①Use method of spring opener	②Use method of flat screwdriver
The opening operation is performed using a spring opener as illustrated 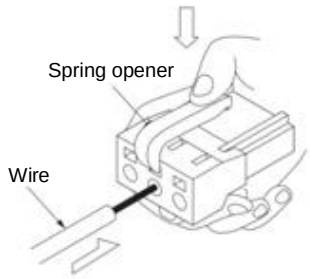 	As shown in the figure, insert a flat-blade screwdriver into the screwdriver insertion opening to open the wire insertion part. 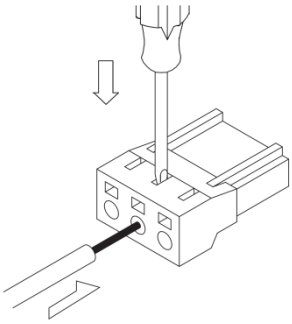

4. Insert the core wire part of the wire into the wire insertion part. After insertion, pull out the spring opener or a slotted screwdriver.

5. Repeat the above operations and make necessary connections.

6. After wiring is completed, install the connector to the servo drive.

4.3.3 Power on sequence control

Please consider the following points when designing the power on sequence control.

- After the control power is turned on, the servo alarm output (ALM) signal is output within a maximum of 5.0 seconds. Please consider it when the power on sequence

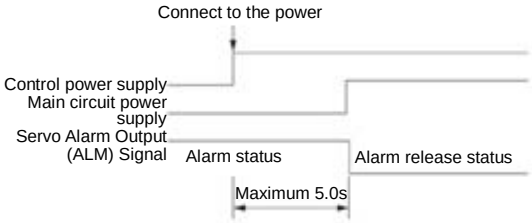

control. Switch on the main circuit power supply after ALM signal OFF (alarm cleared).

△,!Warning
• Even if the power supply is turned off, high voltage may remain in the servo drive. To prevent electric shock, do not touch the power terminals. After the discharge is completed, the CHARGE indicator will go out. Please connect and check after confirming that the CHARGE indicator is off.

4.3.4 Power wiring diagram

• Example of wiring for three-phase power input:

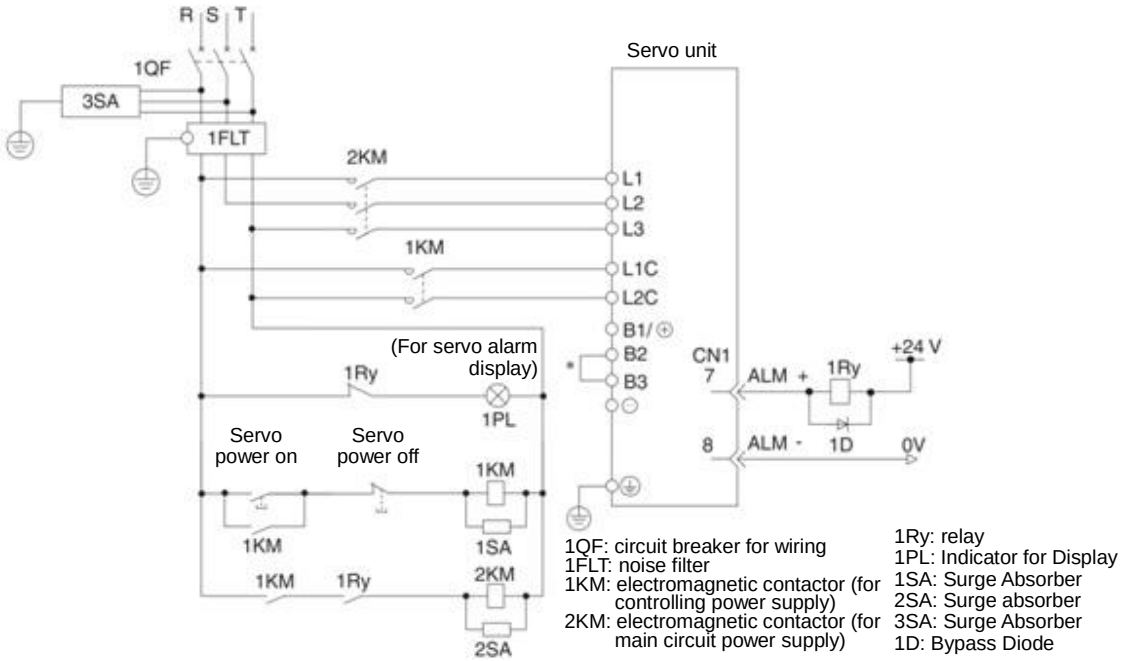

* PSD-A -28D□□, PSD-A -40D□□ No built-in resistor, no short circuit between B2 and B3. Please do not short-circuit.

4.3.5 Connection of Regenerative Resistance

The connection of the external regenerative resistor will be described below.

△,!Warning
• Do not mistake the wiring of the regenerative resistor. In particular, do not short-circuit B1/⊕ -B2. Otherwise, the regenerative resistor and servo drive will be damaged and fire will occur.

Connection method of regenerative resistor

1. Remove the wire between terminals B2-B3 of servo drive

2. Connect external regenerative resistor to B1/⊗ and B2 terminals.

3. Set Pn600 (regenerative resistance capacity) and Pn603 (regenerative resistance value).

(Note) PSD-A -28D□□ and PSD-A -40D□□ no built-in regenerative resistor, and cannot be shorted between B2 and B3.

External regenerative resistor shall be connected between B1/⊗ and B2.

4.4 Servo motor connection

4.4.1 Terminal symbol and terminal name

Servo drive terminals and connectors required for connection between servo drive and servo motor are as follows.

Terminal/connector symbol	Terminal/connector name
U, V, W	Servo motor power supply connection terminal
⏚	Ground terminal
CN2	Servo motor encoder connector

4.4.2 Pin Arrangement of Connector (CN2) for Encoder

Terminal pin number	Signal name	Function
1	PG5V	Encoder Power +5V
2	PG0V	Encoder Power 0V
3	E+*	Battery (+) for absolute value encoder
4	E-*	Battery for absolute value encoder (-)
5	SD+	Encoder serial data (+)
6	SD-	Encoder serial data (-)
Housing	Shielded	——

* Incremental encoders do not require wiring.

4.4.3 Connection of Servo Drive and Encoder

Absolute value encoder
When using absolute value encoder, please install battery on encoder cable with battery unit.

• Example of Wiring Using Encoder Cable with Battery Unit

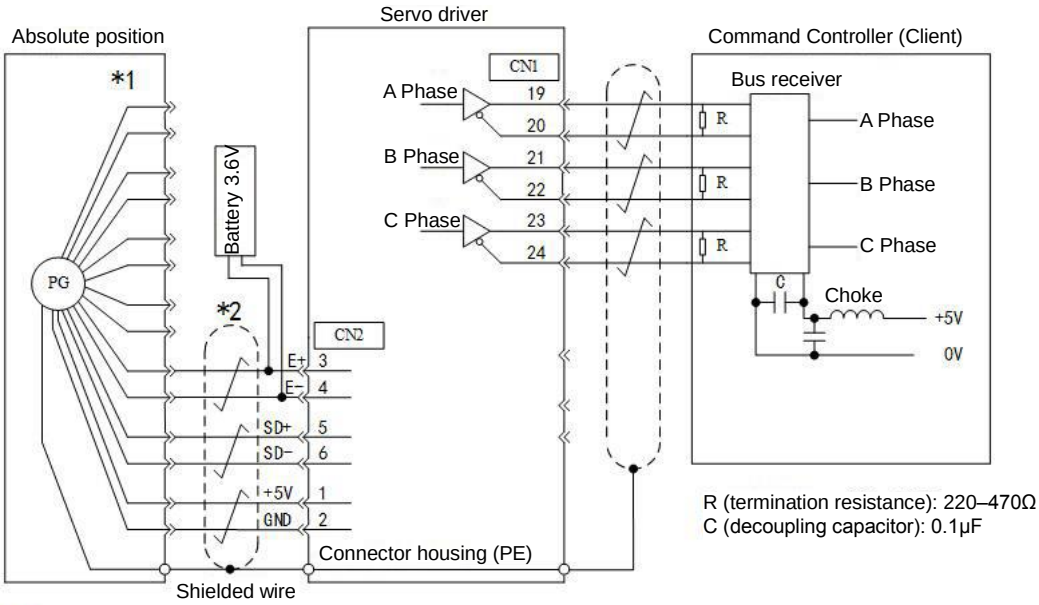

*1: The number of connector pins varies depending on the servo motor used.

*2: Indicates a multi-stranded shielded wire.

4.4.4 Wiring of Servo Drive and Brake

Important

- When using a motor with a brake, please select a surge absorber according to the brake current and power supply used.
- Please confirm the brake action time through the user equipment after connect the surge absorber. The brake action time will vary depending on the type of surge absorber.
- Please form a relay circuit to enable the brake to operate in case of emergency stop.

Example of relay circuit

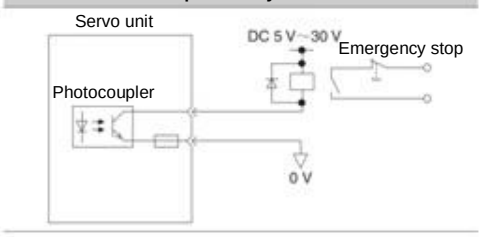

- The brake control output (/BK) signal can change the distribution of the output signal.
- When using the 24V brake, the DC 24V power supply must be separated from the input and output signals (CN1) and other power supplies separately.
  Common power supply will lead to misoperation of input and output signals.

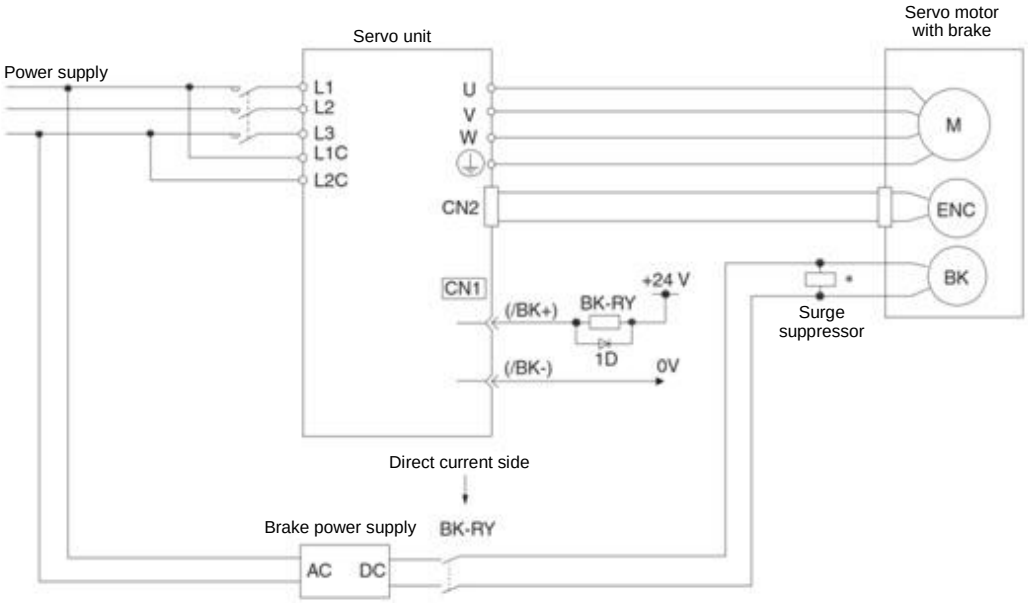

BK-RY: brake control relay
1D: Bypass Diode

* Please install it near the brake terminal of servo motor.

4.5 Connection of input and output signals

4.5.1 Name and function of input/output signal connector (CN1)

In factory setting, the pin number, name and function of input and output signals are as follows.

Needle number	Name	Function		Needle number	Name	Function	
		Uniaxial driver	Biaxial drive			Uniaxial driver	Biaxial drive
1	APULS+	Command pulse input	A axis command pulse input	26	BPULS+	Reservation	b axis command pulse input
2	APULS-			27	BPULS-		
3	BSIGN+	Command symbol input	A axis command symbol input	28	BSIGN+	Reservation	b axis command symbol input
4	BSIGN-			29	BSIGN-		
5	ANA1+	Speed command input	A axis speed command input	30	ANA2+	Torque command input	b axis speed command input
6	ANA1-			31	ANA2-		
7	OUT0+	Output outlet 0, redistributable (Factory: ALM)	Output outlet 0, redistributable (Ex-factory: A axis ALM)	32	OUT3+	Output outlet 3, redistributable (Factory Reservation)	Output outlet 3, redistributable (Ex-factory: b axis ALM)
8	OUT0-			33	OUT3-		
9	OUT1+	Output outlet 1, redistributable (Ex-factory:/COIN)	Output outlet 1, redistributable (Ex-factory: Z-axis/COIN)	34	OUT4+	Output outlet 4, redistributable (Factory Reservation)	Output outlet 4, redistributable (Ex-factory: b axis / COIN)
10	OUT1-			35	OUT4-		
11	OUT2+	Output outlet 2, redistributable (Ex-factory:/BK)	Output outlet 2, redistributable (Ex-factory: A axis / BK)	36	OUT5+	Output outlet 5, redistributable (Factory Reservation)	Output outlet 5, redistributable (Ex-factory: b axis / BK)
12	OUT2-			37	OUT5-		
13	DICOM	Input signal common terminal		38	--		
14	IN0	Input outlet 0, redistributable (Ex-factory:/ S- ON)	Input outlet 0, redistributable (Ex-factory: A axis / S- ON)	39	IN4	Input outlet 4, redistributable (Factory Reservation)	Input outlet 4, redistributable (Ex-factory: b axis / S- ON)
15	IN1	Input outlet 1, redistributable (Ex-factory:/P- CON)	Input outlet 1, redistributable (Ex-factory: A axis /P - CON)	40	IN5	Input outlet 5, redistributable (Factory Reservation)	Input outlet 5, redistributable (Ex-factory: b axis / P- CON)
16	IN2	Input outlet 2, redistributable (Ex-factory:/P- OT)	Input outlet 2, redistributable (Ex-factory: A axis /P - OT)	41	IN6	Input outlet 6, redistributable (Factory Reservation)	Input outlet 6, redistributable (Ex-factory: b axis / P- OT)
17	IN3	Input outlet 3, redistributable (Ex-factory:/N- OT)	Input outlet 3, redistributable (Ex-factory: A axis /N - OT)	42	IN7	Input outlet 7, redistributable (Factory Reservation)	Input outlet 7, redistributable (Ex-factory: b axis /N - OT)
18	--			43	--		
19	APAO+	PG frequency division output phase A	A Axis PG frequency division output phase A	44	BPAO+	Reservation	A Axis PG frequency division output phase A
20	APAO-			45	BPAO-		
21	APBO+	PG frequency division output phase B	A Axis PG frequency division output phase B	46	BPBO+	Reservation	b Axis frequency division output phase B
22	APBO-			47	BPBO-		
23	APCO+	PG frequency division output phase C	A Axis PG frequency division output phase C	48	BPCO+	Reservation	b Axis frequency division output phase C
24	APCO-			49	BPCO-		
25	GND	Signal ground		50	GND	Signal ground	

(Note) 1. Do not use the vacant terminals.

2. Please connect the shielded wire of the input and output signal cable to the connector housing.

3. For EtherCAT/MII/MII models, AI and most of DI/DO is not available, for DI, only POT/NOT works, For DO, brake works.

4.5.2 Pin Arrangement of Input and Output Signal Connector (CN1)

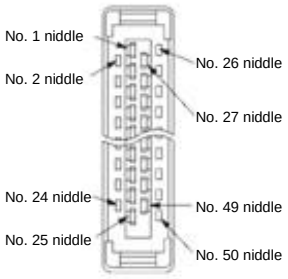

The appearance when the connector housing is not installed as seen from the arrow direction is as follows.

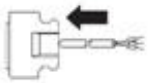

2	PULS-	1	PULS+	27	-	26	-
4	SIGN-	3	SIGN+	29	-	28	-
6	VREF-	5	VREF+	31	TREF-	30	TREF+
8	ALM-	7	ALM+	33	OUT3-	32	OUT3+
10	OUT1-	9	OUT1+	35	OUT4-	34	OUT4+
12	OUT2-	11	OUT2+	37	OUT5-	36	OUT5+
14	IN0	13	DICOM	39	IN4	38	-
16	IN2	15	IN1	41	IN6	40	IN5
18	-	17	IN3	43	-	42	IN7
20	PAO-	19	PAO+	45	-	44	-
22	PBO-	21	PBO+	47	-	46	-
24	PCO-	23	PCO+	49	-	48	-
		25	GND			50	-

4.5.3 Examples of wiring for input and output signals

■ Position control mode

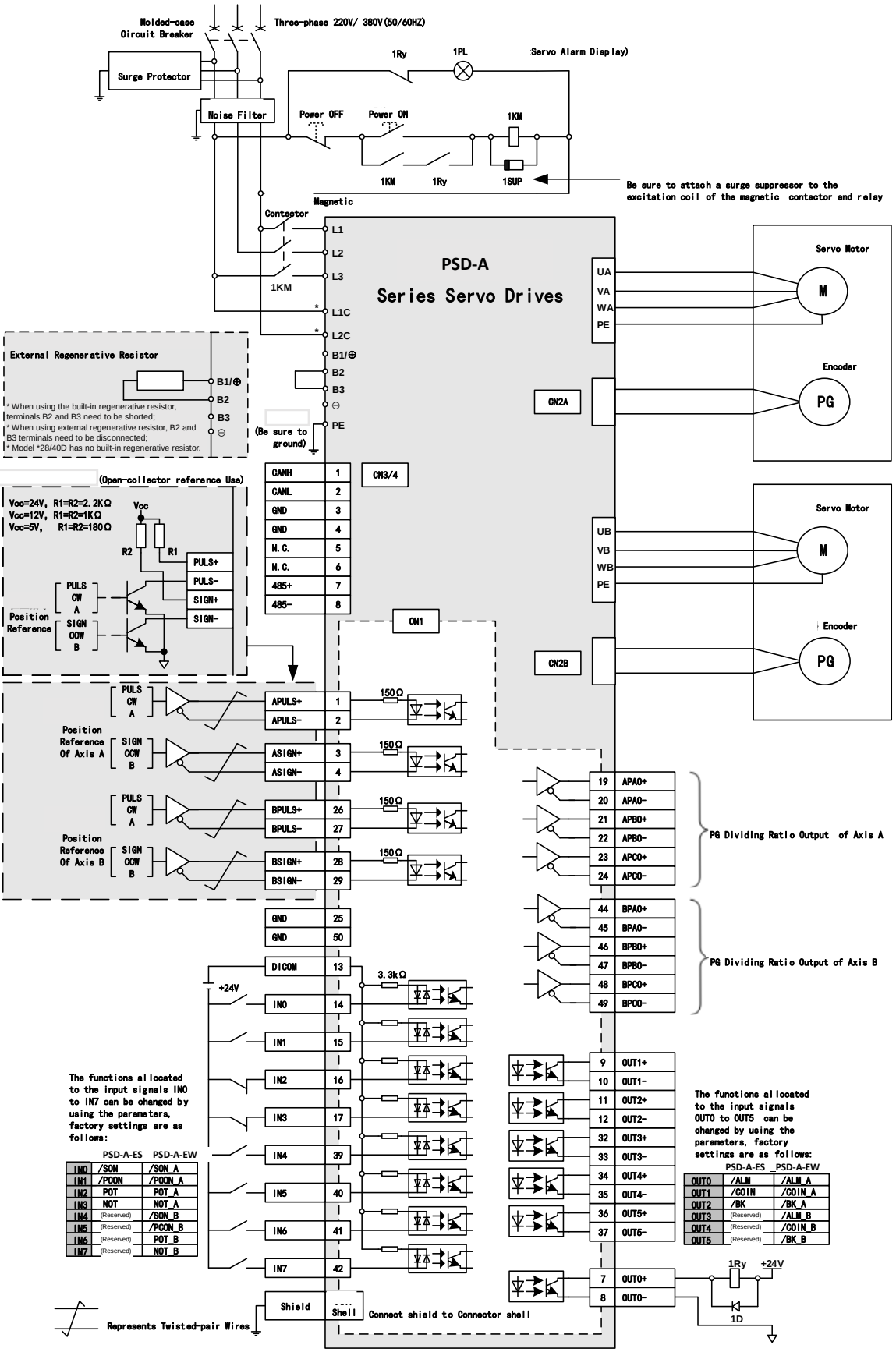

*** AC 380V model control power supply is 15D/21D： DC 24V，-10% ～ +10%； 28D/40D： AC380V**

* For EtherCAT/MII/MII models, AI and most of DI/DO is not available, for DI, only POT/NOT works, For DO, brake works.

■ Speed/Torque Control Mode

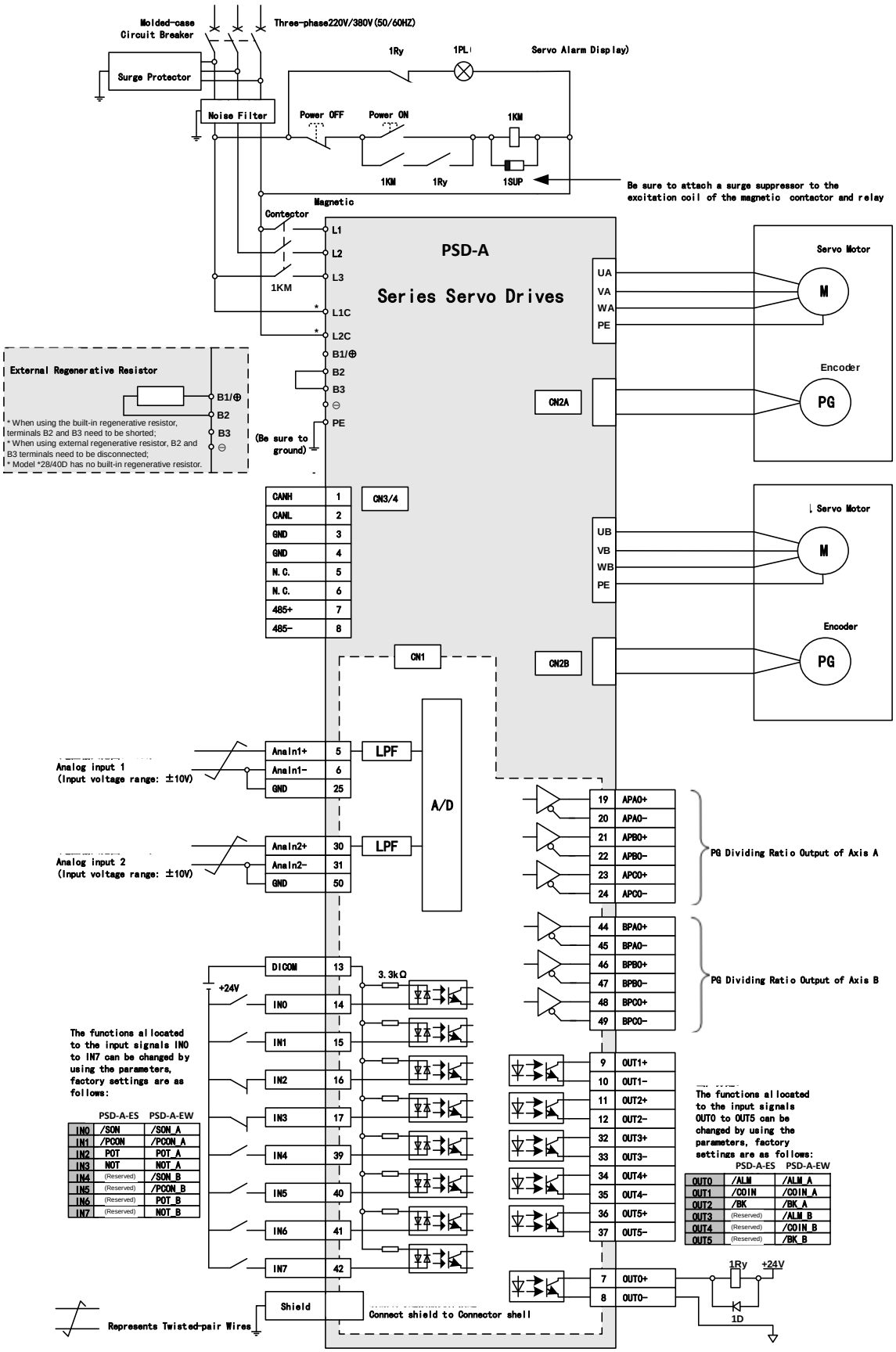

*** AC 380V model control power supply is 15D/21D： DC 24V，-10% ～ +10%； 28D/40D： AC380V**

* For EtherCAT/MII/MII models, AI and most of DI/DO is not available, for DI, only POT/NOT works, For DO, brake works.

4.5.4 Input-output loop

Sequential control input loop

◆ Optocoupler Input Loop

The CN1-IN0 ~ CN1-IN7 terminals of CN1 port will be described below.

Example of relay circuit	Example of open collector Circuit
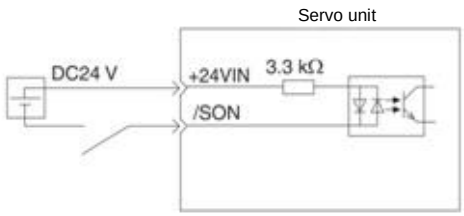	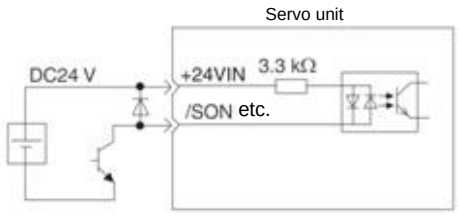

(Note) The external power supply (DC24 V) must have a capacity above 50 mA.

The servo-driven input loop uses a bidirectional optocoupler.

Please select common collector loop connection or common emitter loop connection according to mechanical specifications.

Common collector loop	Common emitter loop
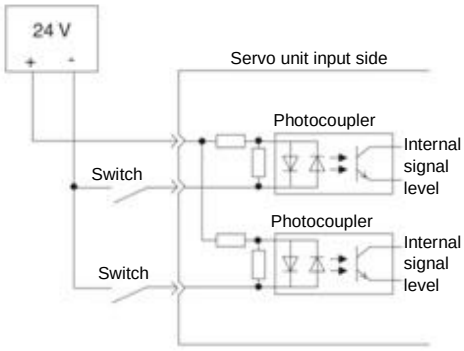	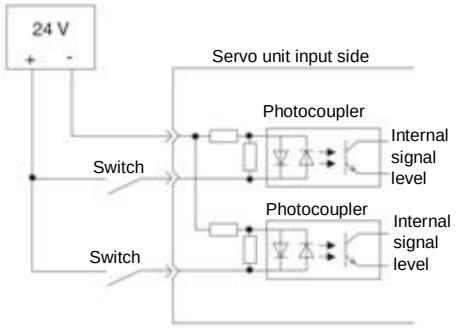

Polarity of input signal		Polarity of input signal	
Photocoupler	Internal level signal	Photocoupler	Internal level signal
ON	L level	ON	L level
OFF	H level	OFF	H level

Sequential control output loop

Important

The output circuit may be short-circuited due to wrong wiring and application of abnormal voltage.
The brake does not operate, which may lead to mechanical damage or casualties when the above-mentioned faults occur.

◆ Optocoupler output Loop

Servo alarm output (ALM) signal, servo ready output (/S-RDY) signal and other sequence control output signals are optocoupler output loops. Connect via relay circuit or line receiver circuit.

Example of relay circuit	Example of open collector Circuit
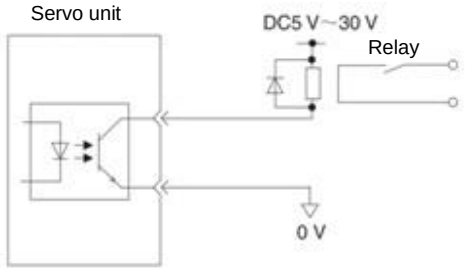	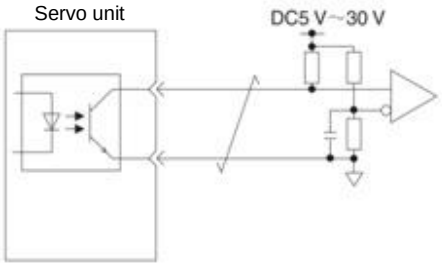

(Note) The maximum allowable voltage and current ranges of the output loop of the photocoupler are as follows.

- Maximum allowable voltage: DC30 V
- Current range: DC5 ~ 50 mA

◆ Output loop of linear driver

Next, the CN1-19 ~ 24 (A, B, C phase signals) terminals of CN1 port will be described.

The serial data of the encoder is converted into output signals (PAO+, PAO-, PBO+, PBO-) of 2-phase (A-phase, B-phase) pulses and origin signals (PCO+, PCO-) in one coil of the encoder are output through the output loop of the linear driver. On the upper device side, please use the line receiver circuit to receive.

Example of Line Receiver Loop
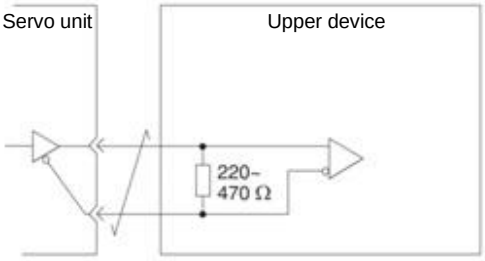

Chapter 5 Basic functions to be set before operation

5.1 Operation of Parameters (Pn□□□)

The following describes the classification, writing method and setting method of parameters used in this manual

5.1.1 Classification of the parameter

The servo drive parameters are divided into the following 2 categories.

Category	Meaning
Setting parameters	Basic setting parameters required for operation
Parameters for adjustment	Adjust parameters of servo performance

Supplementary notes

When using the digital operator to display and set the adjustment parameters, the adjustment parameters under factory setting will not be displayed.
Please set to Pn00b = n. □□□ 1 (all parameters are displayed).

Parameter		Meaning	Effective time	Category
Pn00B	n.□□□0 [Factory setting]	Only set parameters are displayed	Power restart	Setup
	n.□□□1	Display all of the parameters		

5.1.2 Writing Method of Parameters

There are two writing methods for parameters: numerical setting type for setting numerical value and function selection type for selecting function.

- Numerical setting type

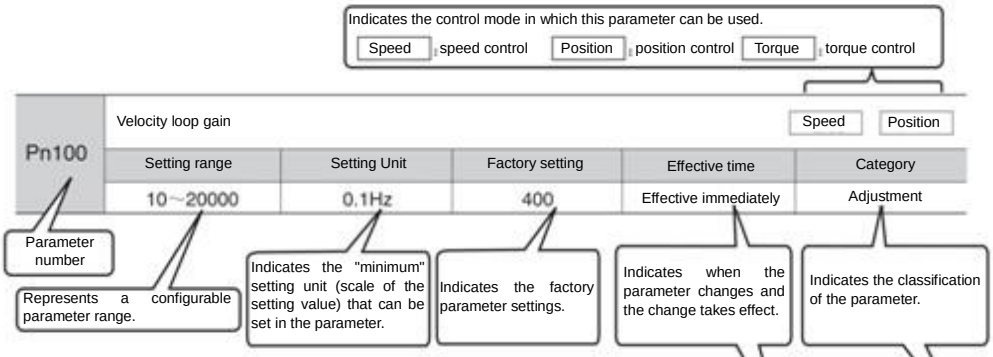

- Function selection type

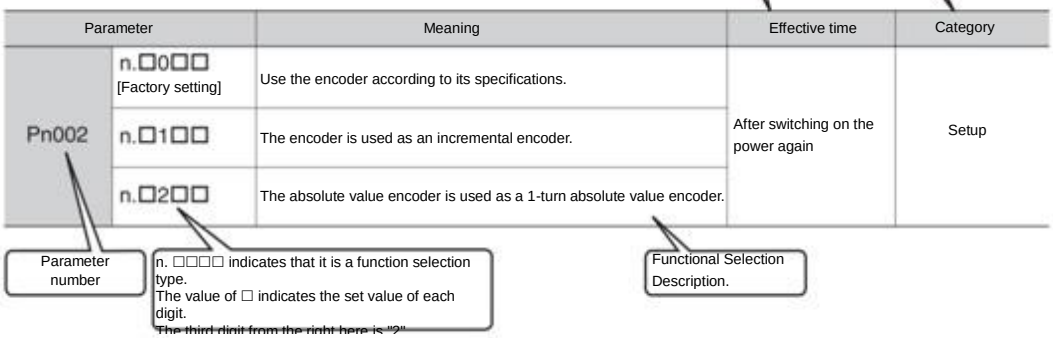

5.1.3 How to Set Parameters

Parameters can be set using the panel operator or using iWatch+ debugging software.

5.1.4 Write inhibit setting of parameters

This function prohibits the use of panel operators to change parameters. However, iWatch+ debugging software can be used to change parameters.

5.1.5 Initialization of parameter settings

Restore the parameters to the function used when factory setting. You can choose whether to initialize.
The values adjusted using Fn00C, Fn00D, Fn00E, Fn00F will not be initialized due to the execution of this function.

Important	In order for the setting to take effect, the power supply for servo drive must be switched on again after operation.

Confirmation before execution

Please confirm the following settings before initializing the parameter settings.
• The write inhibit setting of the parameter must not be set to "write inhibit"
• Must be in servo OFF state

5.2 Setting of Communication Specifications for MECHATROLINK-II

The communication specification of MECHATROLINK-II is set by servo drive parameters PA013 and PA014.

5.2.1 Communication specification setting

Parameter		Meaning	Effective time	Category
Pn014	n.□□□0	Communication speed setting 0: 4Mbps 1: 10Mbps	Power restart	Setup
	n. □□□1 [Factory setting]			
	n.□□0□	Transfer byte settings 0: 17 bytes 1: 32 bytes		
	n.□□1□ [Factory setting]			

5.2.2 Station address setting

Pn013	Address of MECHATROLINK-II station			Speed Position Torque	
	Setting range	Setting Unit	Factory setting	Effective time	Category
	0000～00FF	--	0001	Power restart	Setup

5.3 Setting of Communication Specifications for MECHATROLINK-III

The communication specification of MECHATROLINK-III is set by servo drive parameters PA013 and PA014.

5.3.1 Communication specification setting

Parameter		Meaning	Effective time	Category
Pn014	n.□□0□	Transfer byte settings 0: 32 bytes 1: 48 bytes	Power restart	Setup
	n.□□1□ [Factory setting]			

5.3.2 Station address setting

Pn013	Address of MECHATROLINK-III station			Speed Position Torque	
	Setting range	Setting Unit	Factory setting	Effective time	Category
	0000～00FF	--	0021	Power restart	Setup

5.4 Setting of EtherCAT communication specifications

The communication specification of EtherCAT communication is set by servo drive parameters PA013 and PA014.

5.4.1 Setting of Communication Specifications

Parameter		Meaning	Effective time	Category
Pn014	n.□□□0 [Factory setting]	EtherCAT station address selection mode 0: set the parameter Pn013 as the station address of EtherCAT. 1: Take the value of SII area (0004h) as the station address of EtherCAT	Power restart	Setup
	n.□□□1			

5.4.2 Station address setting

Pn013	EtherCAT station address			Speed Position Torque	
	Setting range	Setting Unit	Factory setting	Effective time	Category
	0000～FFFF	--	1	Power restart	Setup

5.5 Setting of Power Supply Types for Main Circuit and Control Circuit

Servo drive can also run when the main loop and control loop are AC power input or DC power input. When selecting AC power input, the servo drive can be operated using single-phase power input or three-phase power input. The relevant settings for the power supply are as follows.

5.5.1 Setting of AC Power Input/DC Power Input

Whether the main loop power supply for servo drive uses AC power input or DC power input is set by Pn 001 = n.□X□□ (setting of AC/DC input for main loop power supply).
When the set value is Pn 001 = n.□X□□, if it does not conform to the actual power input specification, A.330 (main circuit power supply wiring error) will occur.

Case

Example of A.330 (Main Circuit Power Supply Wiring Error)

- When it is set to input AC power for use (Pn 001 = n. □0□□), DC power is input between B1/⊗terminals.
- When the input DC power source is set to be used (Pn 001 = n. □1□□), AC sources are input to L1, L2 and L3 terminals.

Parameter		Meaning	Effective time	Category
Pn001	n.□0□□ [Factory setting]	For AC power input	Power restart	Setup
	n.□1□□	For DC power input		

△,!Warning

- Please connect with designated terminals when AC power supply and DC power supply are connected with servo drive.
  - ・AC power supply should be connected to L1/L2/L3 terminal and L1C/L2C terminal of servo drive.
  - ・Please connect DC power supply with B1/⊕ terminal and terminal of servo drive, L1C/L2C.
  Failure to do so may result in failure or fire.
- When using DC power input, be sure to set it as DC power input (Pn 001 = n.□1□□) before inputting the main loop power.
  When DC power is input without setting it as DC power input (Pn 001 = n.□1□□), it will lead to burning of servo-driven content components and cause fire and equipment damage.
- When DC power is input, it takes a certain time to discharge after the main power is cut off. After the power supply is cut off, high voltage will remain inside the servo drive, please pay attention to avoid electric shock.
- When inputting DC power supply, please set fuse on the power supply wiring.
- The servo motor returns the regenerative energy to the power supply during the regenerative action. Servo drive does not undergo regeneration processing when using DC power input, so please conduct regeneration energy processing on the power supply side.

5.5.2 Setting of Single-Phase AC Power Input/Three-Phase AC Power Input

Three-phase AC220V power supply input servo drive is of three-phase power supply input specifications, as well as models that can be used under single-phase AC200V power supply input.

The servo drive models that can support single-phase AC220V power input are as follows.
- PSD-A -B(E)S-03A□□, PSD-A -B(E)S-06A□□, PSD-A -B(E)S-10A□□,
  PSD-A -B(E)W-03A□□, PSD-A -B(E)W-06A□□, PSD-A -B(E)W-10A□□,

When using the above servo-driven main loop power supply under single-phase AC220V power supply, please change it to pn00b = n.□1□□ (single-phase power input is supported).

Parameter		Meaning	Effective time	Category
Pn00B	n. □0□□ [Factory setting]	For three-phase AC power input	Power restart	Setup
	n. □1□□	For single phase AC power input		

5.6 Function and setting of servo ON input (/S-ON) signal

The servo ON input (/S-ON) signal is a signal that enables the servo motor to enter an operational state.
The function and setting of the /S-ON signal will be described below.

5.6.1 Function of servo ON input (/S-ON) signal

Type	Signal name	Connector pin number	Signal status	Meaning
Output	/S-ON	Distribution required	ON (closed)	The servo motor is energized to enter a drivable state.
			OFF (OFF)	Servo motor is not energized and cannot be driven.

The /S-ON signal can be set to Pn50a = n. □□X□ (servo ON input (/S-ON) signal distribution) and distributed to terminals of other input signals.

Important

1. Please be sure to input speed command/position command/torque command after turning on /S-ON signal to start or stop servo motor. If a command is input first, and then the motor is started or stopped by turning on or off the /S-ON signal and AC power supply, internal components may be aged, resulting in motor failure.
2. Please input /S-ON signal when the servo motor is stopped. The servo cannot be turned ON when the motor rotates.

5.6.2 Set to Constant Servo ON (Motor Energized)

Pn50A = n. □□X□ (servo ON input (/S-ON) signal distribution) is set to 9 (when /S-ON signal is set to constant servo on (motor on)), it can be set to constant servo on (motor on).

Parameter		Meaning	Effective time	Category
Pn50A	n.□□0□ [Factory setting]	Use the /S-ON signal to turn servo ON/ servo OFF.	Power restart	Setup
	n.□□9□	Set to Constant Servo ON (Motor Energized). (Fix the /S-ON signal to always "active".)		

Important

1. If the servo ON is set to always be valid, the motor will be powered on when the power supply of the servo drive main loop is turned on. When the speed command/position command/torque command is input, the servo motor or mechanical system may have unexpected actions, so please take safety measures.
2. Even if an inoperable state (non-energized state) is entered due to a resettable alarm, it will automatically return to an operable state (energized state) as long as alarm reset is performed.
If the alarm reset is performed in the state of servo ON when it is set to normal, the servo motor or mechanical system may have unexpected actions, so please pay attention.

5.7 Setting of Motor Rotation Direction

The rotation direction of the servo motor can be switched without changing the polarity of the speed command/position command (command direction) (Pn 000 = n.□□X□).
At this time, although the rotation direction of the motor will change, the polarity (phase relationship between phase A and phase B) of output signals such as encoder frequency division pulse output will not change. Please set according to the system.

The "forward rotation direction" set by the factory is "counterclockwise rotation (CCW)" as viewed from the load side of the servo motor.

Parameter		Forward/reverse command	Motor rotation direction and encoder frequency division pulse output	Effective overtravel (OT)
Pn000	n.□□□0 the CCW direction is the forward rotation direction. Factory setting]	Forward command	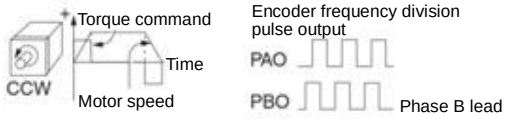	Prohibit positive rotation side drive input (P-OT) signal
		Reverse command	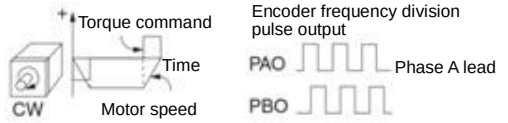	Disable reverse side drive input (N-OT) signal
	n.□□□1 the CW direction is the forward rotation direction. Reverse Mode)	Forward instruction	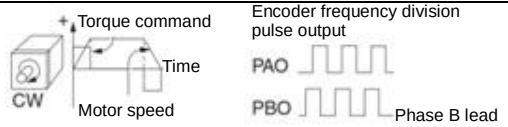	Prohibit positive rotation side drive input (P-OT) signal
		Reverse command	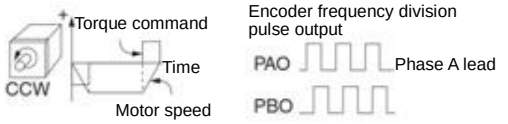	Disable reverse side drive input (N-OT) signal

5.8 Functions and settings of over-travel prevention

The over-travel prevention function of servo drive refers to the safety function of forcing the servo motor to stop by inputting the signal of limit switch when the movable part of the machine exceeds the designed safe movement range.

The overtravel signal includes a P-OT signal that prohibits forward rotation and an N-OT signal that prohibits reverse rotation. The P-OT and N-OT signals are used to set a limit switch at the position to be limited when starting the machine under the drive of the servo motor, and then stop the machine through the signals.

Examples of servo drive wiring are shown below.

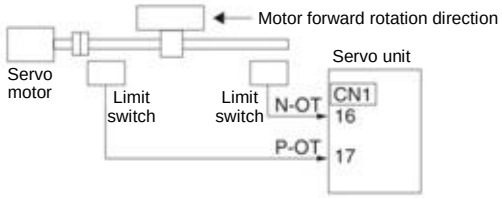

Rotary applications such as round tables and conveyors do not require over-travel prevention function, and there is no need to wire the over-travel prevention input signal at this time. The following is a description of the parameter setting related to the over-travel prevention function.

△, !Notes
• In order to prevent accidents caused by poor contact and disconnection of contact parts, please use "normally closed contact" for limit switches. In addition, do not change the factory setting of the polarity of over-travel signals (P-OT, N-OT). • When the servo motor is used as a vertical shaft, the brake control output (/BK) signal will remain in the ON (brake on) state in the overtravel state, so the workpiece may fall off when overtravel occurs. In order to prevent the workpiece from falling off, please set it to a zero fixed state after the servo motor stops (Pn 001 = n.□□1□). • In case of overtravel, it will enter the base blocking state after stopping, but it may be dragged back when the load shaft side receives external force. In order to prevent the servo motor from being dragged back due to external force, please set it to a fixed zero position after the servo motor stops (Pn 001 = n.□□1□).

5.8.1 Overtravel signal

The overtravel signal includes a P-OT signal that prohibits forward rotation and an N-OT signal that prohibits reverse rotation.

Type	Signal name	Connector pin number	Signal status	Meaning
Input	P-OT	CN1-IN2	ON	Forward-turning side can be driven (normal operation)
			OFF	It is forbidden to drive the forward rotation side (forward rotation side over travel)
	N-0T	CN1-IN3	ON	The reverse side can be driven (normally operated)
			OFF	Reverse side drive is prohibited (reverse side overtravel)

Even in the over-travel state, it is still allowed to drive in the opposite direction by inputting command.

5.8.2 Select whether the over-travel prevention function is valid/invalid

The valid/invalid over-travel prevention function can be selected by PN50A = n.X□□□ (prohibiting the distribution of the forward-rotation-side drive input (P-OT) signal) and PN50B = n. □□□X (prohibiting the distribution of the reverse-rotation-side drive input (N-OT) signal).
When the selection is invalid, there is no need to connect the input signal for over-travel prevention.

Parameter		Meaning	Effective time	Category
Pn50A	n. 2□□□ [Factory setting]	After the overtravel function takes effect, input the No Forward Drive Input (P-OT) signal from CN1-IN2.	Power restart	Setup
	n. 8□□□	Overtravel function fails. Forward rotation side drive is always allowed.		
Pn50B	n □□□3 [Factory setting]	After the overtravel function takes effect, input the drive input (N-OT) signal from CN1-IN3 on the reverse side.	Power restart	Setup
	n. □□□8	Overtravel function fails. Reverse side drive is always allowed.		

5.8.3 Selection of Motor Stopping Method for Over-travel Prevention Function

The servo mOTor stop method when the overtravel prevention function operates is selected by Pn001 = n □□XX (stop method when servo OFF and Gr.1 alarm occurs, stop method when overtravel (ot)).

Parameter		Stop method of motor *	Turn state after motor stops	Effective time	Category
Pn001	n.□□00 [Factory setting]	Dynamic brake	Free-running operation	Power restart	Setup
	n. □□01				
	n. □□02	Free-running operation			
	n. □□1□	Decelerate according to Pn406 setting	Zero position fixing		
	n. □□2□		Free-running operation		
	n. □□3□	Decelerate according to Pn30A setting	Zero position fixing		
	n. □□4□		Free-running operation		

* Torque control cannot slow down to stop. According to the setting of Pn001 = n. □□□X (servo OFF and stop method in case of Gr.1 alarm), the dynamic brake stops or the free running stops, and enters the free running state after the servo motor stops.

When the emergency stop torque is set to stop the servo motor

When the emergency stop torque is set to stop the servo motor, Pn406 (Emergency Stop Torque) is set.
When Pn001 = n.□□X□ is set to 1 or 2, the servo motor will be decelerated with the set torque of Pn406 as the maximum value.
The factory setting is "800%". This is a large enough value to ensure that the servo motor must output maximum torque. However, the actual effective maximum limit of emergency stop torque is the maximum torque of the servo motor.

Pn406	Emergency stop torque			Speed Position Torque	
	Setting range	Setting Unit	Factory setting	Effective time	Category
	0～ 800	1% *	800	Effective immediately	Setup

* Percentage relative to rated torque of motor.

When the deceleration time is set to stop the servo motor

When setting the deceleration time of the servo motor to stop the servo motor, Pn30A (deceleration time at servo OFF and forced stop) is set.

Pn30A	Deceleration Time for Servo OFF and Forced Stop			Speed Position Torque	
	Setting range	Setting Unit	Factory setting	Effective time	Category
	0～ 10000	1ms	0	Effective immediately	Setup

When Pn30A is set to "0", zero speed stops.
The deceleration time set by Pn30A is the time from the highest speed of the motor to the stop of the motor.

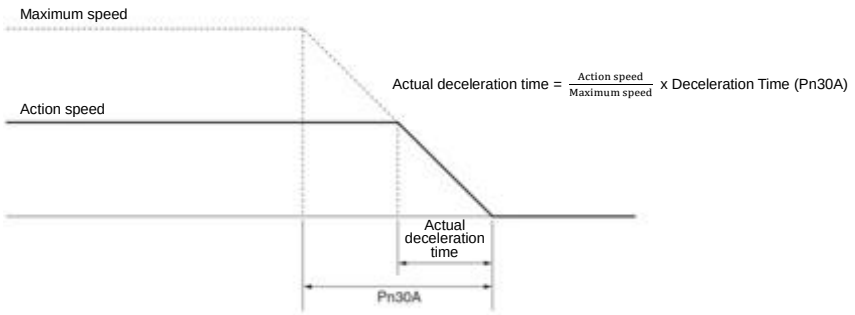

5.8.4 Overtravel warning function

The over-travel warning function refers to the function of detecting A.9A0 (over-travel warning) when entering the over-travel state during servo ON. When using this function, even if the over-travel signal is input instantaneously, the servo drive can notify the upper device of the occurrence of a warning. This function is only valid when the servo is ON. When the servo is OFF, even if it enters the overtravel state, the overtravel warning will not be detected.

Important

- Even if A.9A0 occurs, the motor stop and the motion control action of the upper device will not be affected. In case of over-travel warning, the next step (motion control and other commands) can still be executed. However, according to the processing specifications and procedures of the upper-level device for warning, the actions in case of over-travel warning may change (motion control stops or motion control does not stop, etc.). Please confirm the specifications and procedures of the upper device.
- In case of overtravel, the servo drive will stop the overtravel, so when A.9A0 occurs, the servo motor has not reached the target position set by the upper device. Please confirm whether the shaft is stopped in a safe position through feedback position.

This function is set by the following parameters.

Parameter		Meaning	Effective time	Category
Pn00D	n.0□□□ [Factory setting]	No over-travel warning is detected.	Power restart	Setup
	n.1□□□	Check out over-travel warning.		

The timing chart for detecting warnings is as follows.

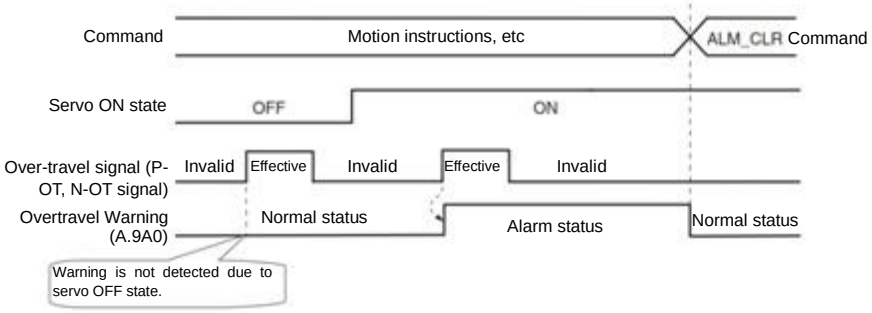

Supplementary notes

1. Warnings will be detected for overtravels in the same direction as the command.
2. Warning cannot be detected for overtravel in the direction opposite to the command direction. For example, even if the N-OT signal is ON, a warning will not be issued during the movement under the command of the positive direction.
3. In the absence of commands, warnings will be detected for overtravels in either the positive direction or the reverse direction.
4. In the over-travel state, no warning will be detected when changing from the servo OFF state to the servo ON state.
5. The release of the warning has nothing to do with servo ON/servo OFF and overtravel signal status. Use the ALM_CLR command to release the warning.
6. In the over-travel state, when the warning is released by using the ALM_CLR command, the warning will not be checked out until the over-travel state is released.
7. If soft limit is detected, over-travel warning will still be detected.

5.9 Brake

The brake is a component that maintains a fixed position when the servo-driven power supply is OFF so that the movable part of the machine will not move due to self-weight or external force. The brake is built into the servo motor with brake, please set it on the mechanical side.

Please use it in the situation shown below.

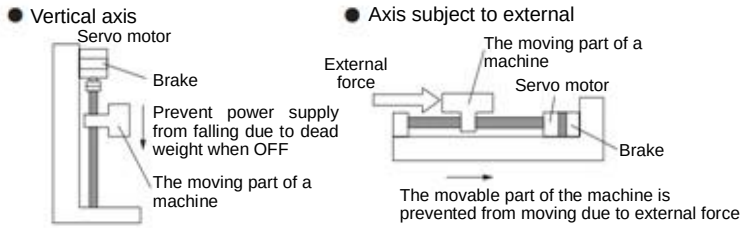

Important

The brake built in the servo motor is a fixed special brake with no excitation action and cannot be used for braking purposes. Please only use it when the servo motor is stopped.

5.9.1 Action sequence of brake

Considering the opening time and operating time of the brake, please set the operating time of the brake as follows.

Terminology explanation	Brake opening time The time between when the brake cONtrol output (/BK) signal is turned on and when the brake is actually turned on. Brake action time The time from when the brake control output (/BK) signal is turned OFF to when the brake actually operates.

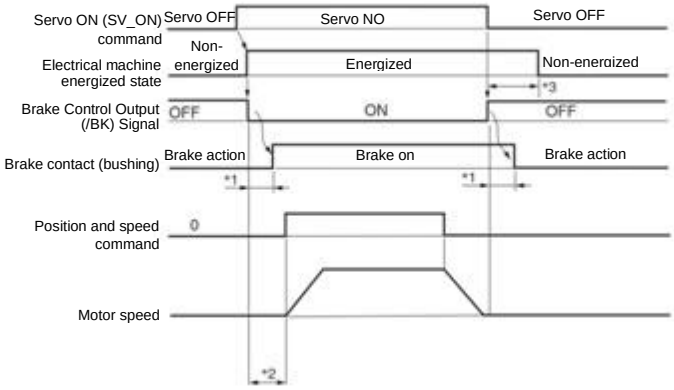

*1. The brake action of servo motor with brake will have a delay time, which is determined by the electrical characteristics of the brake.
*2. After SV_ON command is sent, please wait for the brake to be on for more than +50ms before outputting the commands of the upper device to servo drive.
*3. Please use the following parameters to set the brake action and servo OFF time.
Pn506 (brake command-servo OFF delay time), Pn507 (brake command output speed value), Pn508 (servo OFF- brake command wait time)

5.9.2 Brake Control Output (/BK) Signal

Control the output signal of the brake. The connector pin number of the allocation target can be changed. Please refer to "Distribution of Brake Control Output (/BK) Signal" for details. When the servo is OFF or an alarm is detected, the /BK signal is OFF (brake action). The time when the brake is operated (the time when the /BK signal is turned OFF) is adjusted by the servo OFF delay time (Pn506).

Type	Signal name	Connector pin number	Signal status	Meaning
Output	/BK	Distribution required	ON (closed)	Release the brake
			OFF (OFF)	Make the brake action

Note: The /BK signal remains ON in the overtravel state. At this time, the brake is released.

Distribution of brake control output (/BK) signal

Distribution of /BK signal is set by PN50F = n.□X□□ (distribution of brake control output (/BK) signal).

Parameter		Connector pin number	Meaning	Effective time	Category
Pn50F	n.□0□□	CN1-7,8	Output /BK signal from CN1-OUT0	Power restart	Setup
	n.□1□□	CN1-9,10	Output /BK signal from CN1-OUT1		
	n.□2□□ [Factory setting]	CN1-11,12	Output /BK signal from CN1-OUT2		
	n.□3□□	CN1-32,33	Output /BK signal from CN1-OUT3		
	n.□4□□	CN1-34,35	Output /BK signal from CN1-OUT4		
	n.□5□□	CN1-36,37	Output /BK signal from CN1-OUT5		
	n.□6□□	---	Don't use /BK signal		

Important	When multiple signals are distributed to the same output terminal, OR logic is used for signal output. Please avoid duplication with other signals when distributing /BK signals. In particular, please avoid distributing the rotation detection output (/TGON) signal and /BK signal to the same output terminal. If it is distributed to the same terminal, the /TGON signal will be turned ON at the speed of falling down on the vertical axis, which may cause the brake not to operate.

5.9.3 Output Time of Brake Control Output (/BK) Signal when Servo Motor Stopped

When the servo motor is stopped, the /BK signal will also be OFF when the servo OFF (SV_OFF) command is input. By setting the servo OFF delay time (Pn506), the time when the SV_OFF command is input to the actual motor is not energized can be changed.

Pn506	Brake Command-Servo OFF Delay Time			Speed / Position / Torque	
	Setting range	Setting Unit	Factory setting	Effective time	Category
	0～ 10000	1ms	0	Effective immediately	Setup

- When used for vertical shafts and the like, the dead weight or external force of the mechanical moving part may cause the machine to move slightly. By setting the servo OFF delay time (Pn506), the motor can be in an energized state after the brake is activated. To eliminate slight movement of the machine.
- This parameter is used to set the time when the servo motor is not energized when it is stopped.

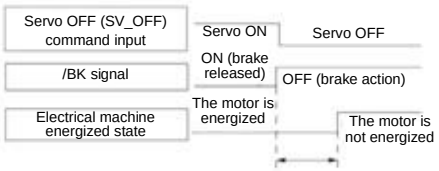

Important

When an alarm occurs, regardless of this setting, the servo motor immediately enters a non-energized state. At this time, the machine sometimes moves before the brake is activated due to the dead weight or external force of the movable part of the machine.

5.9.4 Output Time of Brake Control Output (/BK) Signal in Servo Motor Rotation

When an alarm occurs during the rotation of the servo motor, the servo motor stops and the /BK signal is OFF. At this time, the output time of the /BK signal can be adjusted by setting the brake command output speed value (Pn507) and the servo OFF-brake command waiting time (Pn508).

(Note) When the stop method for alarm occurs is zero speed stop, the setting of Pn506 (brake command-servo OFF delay time) shall be followed after the motor stops.

Pn507	Brake command output speed value			Speed / Position / Torque	
	Setting range	Setting Unit	Factory setting	Effective time	Category
	0～10000	$1min^{-1}$	100	Effective immediately	Setup
Pn508	Servo OFF- Brake Command Wait Time			Speed / Position / Torque	
	Setting range	Setting Unit	Factory setting	Effective time	Category
	10～100	10ms	50	Effective immediately	Setup

When any of the following conditions is met, the brake will act.

- When the motor speed is less than the set value of Pn507 after the motor is not energized

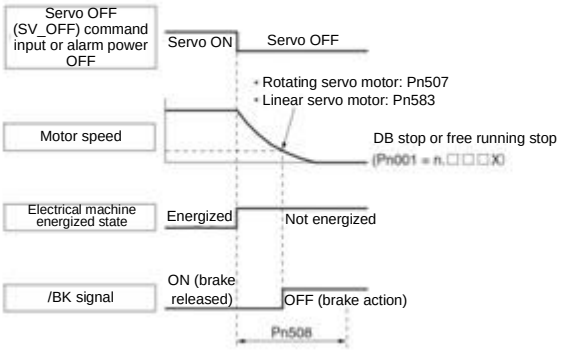

- When the set time of Pn508 elapses after the motor enters the non-energized state

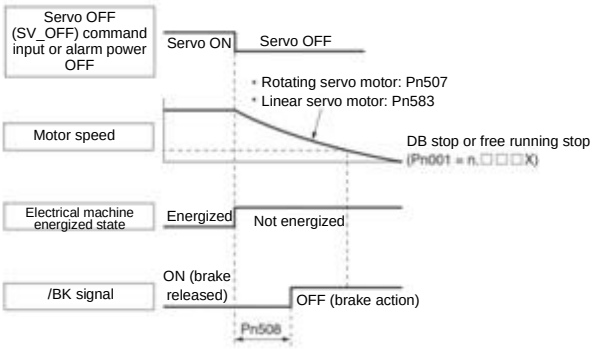

Important	Even if the brake command output speed value (Pn507) is set to a value greater than the maximum speed of the servo motor used, it will still be limited to the maximum speed of the servo motor.

5.10 Servo OFF and Motor Stop Method in Alarm

Servo OFF and motor stop method when alarm occurs are as follows.
There are four ways to stop the motor.

Stop method of motor	Meaning
The dynamic brake (DB) stops	By short-circuiting the electrical circuit of the servo motor, the servo motor can be stopped urgently.
Free running stop	It stops naturally due to friction when the motor rotates.
Zero speed stop	Set the speed command to "0" to make the servo motor stop urgently.
Slow down and stop	According to the emergency stop torque deceleration stop.

There are three states after the motor stops.

Turn state after motor stops	Meaning
Turn state after motor stops	The state in which the servo motor stops after short-circuiting the electrical circuit.
Free running state	The state in which the servo drive does not control the servo motor (the machine will act when applying force from the load side)
Zero position fixed state	A position ring is formed, and the position command is a stop state of "0" (the current stop position is maintained)

Important

- Dynamic brake (DB) is a function of emergency stop. If starting and stopping are performed by power supply ON/OFF or servo ON in the state where the command is input, the DB loop will operate frequently, resulting in aging of internal components of servo drive. Please start and stop the servo motor by speed input command or position command.
- During operation, when the servo is not OFF and the main circuit power supply is OFF or the control power supply is OFF, DB stop is not adopted, but when free operation stop must be adopted, please use the servo drive applicable to the dynamic brake option.
- Regarding the stopping method during alarm, in order to try to shorten the inertial moving distance when the alarm occurs, the factory settings are all zero-speed stop for alarms that allow the selection of zero-speed stop. However, depending on the application, sometimes DB stop is more suitable than zero speed stop.

5.10.1 Motor Stop Method when Servo OFF

The motor stop method for servo OFF is selected through Pn 001 = n.□□□X (servo OFF and stop method for Gr.1 alarm).

Parameter		Stop method Servo motor	State after the servo motor stops	Effective time	Category
Pn001	n.□□□0 [Factory setting]	Dynamic brake	Dynamic brake	Power restart	Setup
	n. □□□1		Free-running operation		
	n. □□□2	Free-running operation	Free-running operation		

(Note) When Pn 001 = n.□□□0 is set (the motor is stopped by the dynamic brake), when the servo motor stops or rotates at an extremely low speed, no braking force will be generated as in the free running state.

5.10.2 Motor stopping method when alarm occurs

Alarms are divided into Gr.1 alarm and Gr.2 alarm. Parameters for setting the motor stop method when an alarm occurs vary depending on the alarm type.

Motor Stop Method in Case of Gr.1 Alarm

When Gr.1 alarm occurs, the servo motor stops according to Pn 001 = n.□□□X. Factory set to dynamic brake stop.

Motor Stop Method in Case of Gr.2 Alarm

When Gr.2 alarm occurs, the servo motor stops according to the settings of the following 3 parameter combinations. Factory set for zero speed stop.

- Pn001=n.□□□X□（Servo OFF and stop method when Gr.1 alarm occurs）
- Pn00A= n.□□□X (stop method in case of Gr.2 alarm)
- Pn00B= n.□□X□ (stop method in case of Gr.2 alarm)

However, in torque control, Gr.1 stopping method is generally used. When set to Pn00B = n.□□1□ (db stop or free running stop), the same stop method as Gr.1 can be adopted. When using multiple servo motors in coordination, this stopping method can be used to prevent the machine from being damaged due to different stopping methods during alarm.

The combination and stopping method of parameter setting contents are described in the following table.

Parameter			Stop method Servo motor	State after the servo motor stops	Effective time	Category
Pn00B	Pn00A	Pn001				
n.□□0□ [Factory setting]	---	n.□□□0 [Factory setting]	Zero speed	Dynamic brake	Power restart	Setup
		n. □□□1		Free-running operation		
		n. □□□2				
n. □□1□		n. □□□0 [Factory setting]	Dynamic brake	Dynamic brake		
		n. □□□1		Free-running operation		
		n. □□□2	Free-running operation			
n. □□2□	n. □□□0 [Factory setting]	n. □□□0 [Factory setting]	Dynamic brake	Dynamic brake		
		n. □□□1		Free-running operation		
		n. □□□2	Free-running operation			
	n. □□□1	n. □□□0 [Factory setting]	Taking the set torque of Pn406 as the maximum value to decelerate the motor	Dynamic brake		
		n. □□□1		Free-running operation		
		n. □□□2				
	n. □□□2	n. □□□0 [Factory setting]		Free-running operation		
		n. □□□1				
		n. □□□2				
	n. □□□3	n. □□□0 [Factory setting]	Decelerate the motor according to the setting of Pn30A	Dynamic brake		
		n. □□□1		Free-running operation		
		n. □□□2				
	n. □□□4	n. □□□0 [Factory setting]		Free-running operation		
		n. □□□1				
		n. □□□2				

(Note) 1. When Pn001 = n.□□0□ or n.□□1□, the setting of Pn00A will be ignored.

2. The setting of PN00A = n.□□□X is only valid for position control and speed control. The setting of Pn00A=n.□□□X will be ignored during torque control, and the setting of Pn001 = n.□□□X will be followed.

5.11 Motor overload detection value

Motor overload detection value refers to the value (threshold) of detecting overload warning and overload alarm when continuous load exceeding the rated value of servo motor is applied. Which can prevent the servo motor from overheating.

Servo drive can change the detection time of A.910 (overload warning) and A.720 (overload (continuous maximum) alarm). However, the detected value of A.710 (overload characteristic and overload (instantaneous maximum) alarm) cannot be changed.

5.11.1 Detection time of overload warning (A.910)

The overload warning detection time at the factory is 20% of the overload warning detection time. By changing the overload warning value (Pn52B), the overload warning detection time can be changed. This function can be used as overload protection function of the used system to improve safety.

For example, as shown in the following figure, when the overload warning value (Pn52B) is changed from 20% to 50%, the overload warning detection time will become half (50%) of the overload warning detection time.

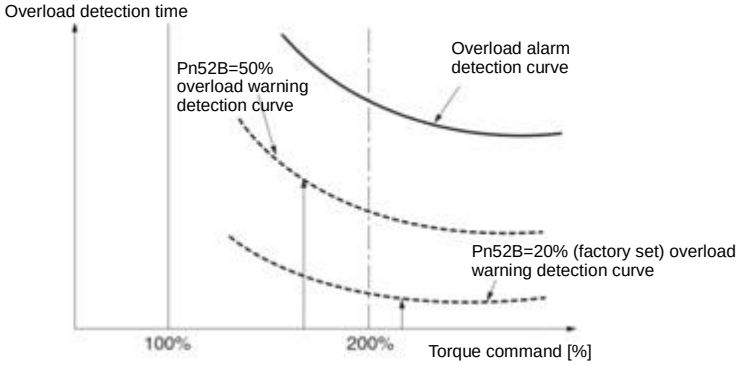

Pn52B	Overload warning value				Speed Position Torque
	Setting range	Setting Unit	Factory setting	Effective time	Category
	0～ 100	1%	20	Effective immediately	Setup

5.11.2 Detection time of overload alarm (A.720)

When the heat dissipation of the servo motor is poor (the heat sink is small, etc.), the detection value of overload alarm can be reduced to prevent overheating.
The coefficient for reducing the overload alarm detection value is Pn52C (motor overload detection base current derating value).

Pn52C	Motor Overload Detection Base Current Decreases Ratings				Speed Position Torque
	Setting range	Setting Unit	Factory setting	Effective time	Category
	0～ 100	1%	100	Power restart	Setup

Overload (continuous maximum) alarm (A.720) can be detected in advance to prevent overload of the motor.

Overload detection time

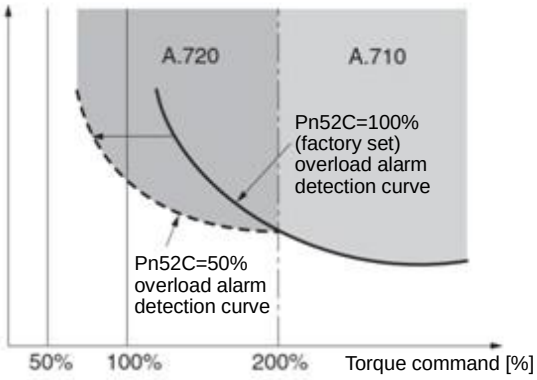

(Note) The gray part of the above figure indicates the area where A.710 and A.720 occur.

5.12 Setting of Electronic Gear

"Command Unit" is the smallest unit of position data that moves the load. The command unit is to convert the movement quantity into physical quantity units such as understandable distance (e.g. m and deg.), instead of converting into pulses.

The electronic gear is a function of converting the movement amount specified according to the command unit into the pulse number required for actual movement.

According to the electronic gear function, the workpiece movement amount per pulse of the input command for servo drive is 1 command unit. That is, if servo-driven electronic gears are used, the pulses can be converted into command units for reading.
(Note) When the upper device sets the electronic gear, the servo-driven electronic gear ratio is usually 1:1.

5.12.1 Setting of Electronic Gear Ratio

The electronic gear ratio is set by Pn20E and Pn210.

Important

The setting range of the electronic gear ratio is as follows.
0.001≤ Electronic Gear Ratio (B/A) ≤64000
A.040 (parameter setting exception alarm) will occur when the setting range is exceeded.

Pn20E	Electronic gear ratio (molecule)				Position
	Setting range	Setting Unit	Factory setting	Effective time	Category
	1～1073741824	1	1	Power restart	Setup
Pn210	Electronic gear ratio (denominator)				Speed Position Torque
	Setting range	Setting Unit	Factory setting	Effective time	Category
	1～1073741824	1	1	Power restart	Setup

Calculation Method for Setting Value of Electronic Gear Ratio

When the machine reduction ratio between the motor shaft and the load side is n/m (the load shaft rotates n times when the motor rotates m times), the set value of the electronic gear ratio is obtained by the following formula.

$$\text{Electronic gear ratio } \frac{B}{A} = \frac{Pn20E}{Pn210} = \frac{\text{Encoder resolution}}{\text{The amount of movement (command unit) by which the load shaft rotates one circle}} \times \frac{m}{n}$$

5.12.2 Setting Examples of Electronic Gear Ratio

Examples of settings are as follows.

Steps	Content	Organizational structure		
		Ball screw	Frustum of a cone	Belt+pulley
		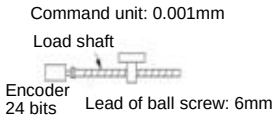	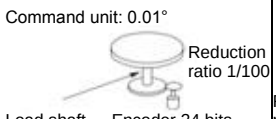	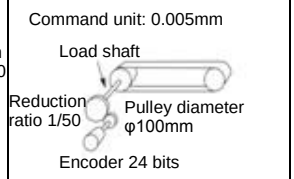
1	Mechanical specification	• Lead of ball screw: 6mm • Reduction ratio 1/1	• Rotation angle of 1 turn: 360 • Reduction ratio 1/100	• Pulley diameter :100mm (pulley circumference: 314mm) • Reduction ratio 1/50
2	Encoder resolution	8388608(23 bits)	8388608(23 bits)	8388608(23 bits)
3	Command unit	0.001 mm (1 μm)	0.01	0.005 mm (5 μm)
4	The amount of movement of the load shaft by one revolution (Command unit)	6 mm/0.001 mm = 6000	360°/0.01° = 36000	314 mm/0.005 mm = 62800
5	Electronic gear ratio	$\frac{B}{A} = \frac{8388608}{6000} \times \frac{1}{1}$	$\frac{B}{A} = \frac{8388608}{36000} \times \frac{100}{1}$	$\frac{B}{A} = \frac{8388608}{62800} \times \frac{50}{1}$
6	Parameter	Pn20E: 8388608	Pn20E: 838860800	Pn20E: 419430400
		Pn210: 6000	Pn210: 36000	Pn210: 62800

5.13 Setting of Absolute Value Encoder

When the system using absolute value encoder is put into use, the number of revolutions data should be initialized. Therefore, when initialization needs to be performed such as the first power on, alarms related to absolute value encoders will occur (A.810, A.820). By setting (initializing) the absolute value encoder, the alarm related to the absolute value encoder will be cleared after the initialization of the rotation number data is performed.

In the following situations, please set (initialize) the absolute value encoder.

- When the system is first put into use
- When A.810 (encoder backup alarm) occurs
- When A.820 (encoder and number check alarm) occurs
- When it is necessary to initialize the rotation number data of the absolute encoder

△, !Notes
• After setting the absolute value encoder, the rotation number data is the value of-2 ~+2 coils. The reference position of the mechanical system will change, so please locate the reference position of the upper device after setting. If the machine is directly operated without positioning the upper device, unexpected actions may occur, resulting in personal injury or mechanical damage.

Supplementary notes

1. There is no rotation number data (usually zero) in the following situations, so it is not necessary to set (initialize) the absolute value encoder.There will be no alarm related to absolute value encoder (A.810, A.820).
   - When using a 1-turn absolute value encoder
   - When the multi-turn absolute value encoder is used as one-turn absolute value encoder (Pn002 = n.□2□□)
2. When using a battery-free absolute value encoder, A.810 (encoder backup alarm) will occur when the power is turned on for the first time. Perform absolute value after the encoder is set (initialized), A.810 will not occur.

5.13.1 Precautions in Setting (Initializing)

- "A.810 (Encoder Backup Alarm)" and "A.820 (Encoder and Number Verification Alarm)" cannot be released by the servo-driven alarm reset input (/ALM-RST) signal. Therefore, it is important to set (initialize) the absolute value encoder.
- When an alarm (A.8□□) monitored by the encoder occurs, please remove the alarm by cutting off the power supply.

5.13.2 Confirmation before execution

Before setting (initializing) the absolute value encoder, be sure to confirm the following.
- The write inhibit setting for the parameter must not be set to "writeinhibited"
- Must be in servo OFF state

5.13.3 Operable tool

The tools that can set (initialize) the absolute value encoder and their allocation to the setting (initialization) of the absolute value encoder are as follows.

Operating tool	Distribution
Panel operator	Fn008
iWatch+ debugging software	[Absolute value Encoder Reset]

5.14 Setting of Regenerative Resistance Capacity

Regenerative resistance refers to the resistance that consumes regenerative energy generated under the conditions of servo motor deceleration, etc.
When connecting external regenerative resistor, Pn600 (regenerative resistor capacity) and Pn603 (regenerative resistor value) shall be set.

△,!Warning
• When connecting external regenerative resistors, be sure to set appropriate values for Pn600 and Pn603. Otherwise, A.320 (regenerative overload alarm) will not be detected normally, which may lead to damage of external regenerative resistor, personal injury and fire. • When selecting an external regenerative resistor, be sure to confirm whether the capacity is appropriate. Otherwise, injuries and fires may result.

	Regenerative Resistance Capacity				Speed Position Torque
Pn600	Setting range	Setting Unit	Factory setting	Effective time	Category
	0 ~ Maximum applicable motor capacity for servo drive	10W	0	Effective immediately	Setup
	Regenerative resistor value				Speed Position Torque
Pn603	Setting range	Setting Unit	Factory setting	Effective time	Category
	0～65535	10mΩ	0	Effective immediately	Setup

The regenerative resistance capacity shall be set to a value matching the allowable capacity of the connected external regenerative resistance. The set value varies depending on the cooling state of the external regenerative resistor.
- In the self-cooling mode (natural convection cooling), it is set to a value less than 20% of the regenerative resistance capacity (W).
- In forced air cooling mode, it is set to a value less than 50% of the regenerative resistance capacity (W).

Case: When the capacity of the self-cooling external regenerative resistor is 100 W, 100 W×20% =20W, so Pn600 (regenerative resistor capacity) should be set to "2" (setting unit: 10 W).

(Note) 1. If the set value is inappropriate, A.320 will be displayed.
2. Factory setting "0" is the set value when servo drive is used to drive the built-in regenerative resistor or the regenerative resistor unit produced by our company.

Important
- When the external regenerative resistor is used at the normal rated load rate, the temperature of the resistor will reach 200˚C ~ 300˚C, so please reduce the rated value before using. For the load characteristics of resistors, please consult the manufacturer.
- To ensure safety, it is recommended to use an external regenerative resistor with a temperature control switch.

Chapter 6 Application function

6.1 Distribution of input and output signals

The I/O signal connector (CN1) has pre-assigned functions, but some terminals can be assigned other functions or change polarity. Function allocation and polarity setting are performed through parameters.

The distribution of input and output signals will be described below.

6.1.1 Distribution of input signals

When the distribution of input signals is changed for use

Important

- When the polarity of each signal of the forward drive input (P-OT) and the reverse drive input (N-OT) is changed to the factory setting, the overtravel prevention function will not operate in case of abnormality such as signal line disconnection. When this setting has to be adopted, please be sure to make action confirmation to ensure there is no safety problem.
- When multiple signals are distributed on the same input loop, they will become exclusive OR logic, and all input signals will act. Therefore, unexpected actions may occur.

The relationship between the input signal assigned to the pin number of the input/output signal connector (CN1) and the parameter setting is as follows.

Input signal	Name of input signal	Parameter
P-OT	Forward Drive Prohibit	Pn50A = n.X□□□
N-OT	Reverse Drive Prohibit	Pn50B = n. □□□X
/P-CL	Forward External Torque Limit	Pn50B = n.□X□□
/N-CL	Reverse External Torque Limit	Pn50B = n.X□□□
/DEC	Origin Return Deceleration Switch Input	Pn511 = n. □□□X
/EXT1	External Latch Input 1	Pn511 = n.□□X□
/EXT2	External Latch Input 2	Pn511 = n.□X□□
/EXT3	External Latch Input 3	Pn511 = n.X□□□
FSTP	Forcibly stop input	Pn516 = n. □□□X

◆ Relationship between parameter setting value and assigned pin number and polarity

The relationship between the parameter setting value of the input signal and the pin number and polarity of the input/output signal connector (CN1) is as follows.

The Setting value of the Parameters	Needle number	Description
0	IN0	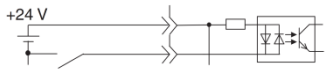 Reversal signal (signal with "/"at the beginning of the signal name: /P-CL signal, etc.) takes effect via cONtact on. Signals (P-OT signals, etc.) without "/"at the beginning of the signal name take effect through contact OFF.
1	IN1	
2	IN2	
3	IN3	
4	IN4	
5	IN5	
6	IN6	
7	IN7	
8	-	If it is not allocated to the needle, the input signal is often invalid. When no signal is used, the set value is set to "8".
9	-	Not allocated to the needle, the input signal is always valid. When no signal is used, the set value is set to "9".

Examples of Changes in Input Signal Distribution

An example of replacing the anti-rotation side drive input (P-OT) signal assigned to CN1-IN1 with the origin reset deceleration switch input (/DEC) signal assigned to CN1-IN3 is as follows.

Pn50A = n.1□□□ Pn511 = n. □□□3 before change
↓ ↓
Pn50A = n.3□□□ Pn511 = n. □□□1 after change

Confirmation of input signal

The status of the input signal can be confirmed by monitoring the input signal.
Input signal monitoring operation reference: 8.3.2 Monitoring of input and output

6.1.2 Distribution of output signals

The output signal can be distributed to the output port of the input/output signal connector (CN1). Allocation is set through Pn50E, Pn50F, Pn510, Pn514.

When the distribution of output signals is changed for use

Important

- No detected signal is in "OFF" state. For example, during speed control, the positioning completion output (/COIN) signal is "OFF".
- If the polarity of the brake control output (/BK) signal is reversed and used with positive logic, the brake will stop when the signal line is broken. When this setting has to be adopted, please be sure to make action confirmation to ensure there is no safety problem.
- When multiple signals are distributed on the same output loop, they will be output by XOR logic.

Examples of Changes in Output Signal Distribution

After the positioning completion output (/COIN) signal assigned to CN1-OUT3 is set to invalid, an example of assignment of the servo ready output (/S-RDY) signal is as follows.

Pn50E = n.0□□3
↓
Pn50E = n.3□□0

Confirmation of Output Signal Status

The status of the output signal can be confirmed through output signal monitoring.
Output signal monitoring operation reference: 8.3.2 Monitoring of input and output

6.1.3 Servo Alarm Output (ALM) Signal

The servo alarm output (ALM) signal is the signal output when the servo drive detects a fault.

Important

Please design an external circuit that turns OFF the power supply of the servo-driven main circuit through the alarm output when a fault occurs.

Type	Signal name	Connector pin number	Signal status	Meaning
Output	ALM	Distribution required	ON (closed)	Servo drive normal state
			OFF (OFF)	Servo drive alarm status

6.1.4 Warning output (/WARN) signal

The servo drive is provided with alarms and warnings.
The alarm indicates that there is an abnormality in the servo drive and the operation needs to be stopped immediately.
The warning is an announcement before the alarm occurs and does not need to stop running.
The warning output (/WARN) signal refers to the warning before the alarm occurs

Type	Signal name	Connector pin number	Signal status	Meaning
Output	/WARN	Distribution required	ON (closed)	Exception Warning Status (Warning Status)
			OFF (OFF)	Normal status

(Note) /WARN signal needs to be distributed. Can be set to Pn50F = n. X□□□ (distribution of warning output (/WARN) signal) and distributed to terminals.

6.1.5 Rotation detection output (/TGON) signal

The rotation detection output (/TGON) signal is a signal indicating that the servo motor is running.
Servo motor according to Pn502 (rotation detection value).

Type	Signal name	Connector pin number	Signal status	Meaning
Output	/TGON	Distribution required	ON (closed)	The servo motor is rotating at a speed higher than the Pn502 set point.

Set the detection value of the speed of the output /TGON signal.

Pn502	Rotation detection value	Speed	Position	Torque

	Setting range	Setting Unit	Factory setting	Effective time	Category
	0～10000	1 min^{-1}	20	Effective immediately	Setup

6.1.6 Ready output (/S-RDY) signal

The servo ready output (/S-RDY) signal turns ON in a state where the servo drive can receive a servo ON (SV_ON) command.

The /S-RDY signal is output (turned ON) under the following conditions.

- Main circuit power supply ON.
- Non-hardware base blocking state.
- No alarm has occurred.
- When the absolute value encoder is used, the sensor ON (SENS_ON) command is input.
- Magnetic Pole Detection Completed (Servo Motor Without Magnetic Pole Sensor)
- When using the absolute value encoder, in addition to the above state, the servo ready signal can be output only under the condition that "the position data of the absolute value encoder has been output to the upper device when the sensor ON (SENS_ON) command is input".

* This condition is excluded when the servo ON (SV_ON) command is input for the first time after the control power is turned on. In this case, when the SV_ON command is input, the magnetic pole detection will start synchronously with the first SV_ON command, and after the magnetic pole detection is completed, the /S-RDY signal will be ON.

Type	Signal name	Connector pin number	Signal status	Meaning
Output	/S-RDY	Distribution required	ON (closed)	State in which servo ON (SV_ON) command can be received
			OFF(OFF)	The state in which the servo ON (SV_ON) command cannot be received.

(Note) /S-RDY signal can be distributed. It can be set to Pn50E = n. X□□□ (distribution of servo ready output (/S-RDY) signal) and distributed to terminals.

6.1.7 Speed consistent output (/V-CMP) signal

The speed coincidence output (/V-CMP) signal is a signal output when the rotational speed of the servo motor coincides with the commanded speed. Used for interlocking with the upper device and other occasions. This output signal can only be used for speed control.

/V-CMP signal is shown below.

Type	Signal name	Connector pin number	Signal status	Meaning
Output	/V-CMP	Distribution required	ON (closed)	Velocity consistent state
			OFF (OFF)	Speed inconsistency

(Note) /V-CMP signal needs to be distributed. It can be set to Pn50E= n.□□X□ (distribution of speed consistent output (/V-CMP) signal) and distributed to terminals.

The speed detection range of the /V-CMP signal is set by Pn503.

Pn503	Detection range of speed consistent signals			Speed	
	Setting range	Setting Unit	Factory setting	Effective time	Category
	0～100	1 min^{-1}	10	Effective immediately	Setup

When the difference between the motor speed and the commanded speed is lower than the set value, the signal is output.

Case Pn503=100, output signal when the command speed is 2000min^{-1} and the motor speed is 1900 ~ 2100 min^{-1}.

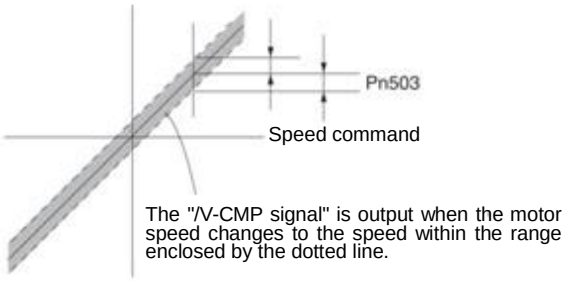

6.1.8 Positioning Completion (/COIN) Signal

When the positioning completion output (/COIN) signal is position control, it indicates the servo motor positioning completion signal.

When the difference between the command position from the upper device and the current position of the servo motor (position deviation: value of deviation counter) is less than the set value of the positioning completion amplitude (Pn522), a /COIN signal will be output.

For the upper device to confirm that the positioning has been completed.

Type	Signal name	Connector pin number	Signal status	Meaning
Output	/COIN	Distribution required	ON (closed)	Positioning is completed
			OFF (OFF)	Positioning is not completed

(Note) /COIN signal needs to be distributed. It can be set to Pn50E = n.□□□X (distribution of positioning complete output (/coil) signal) and distributed to terminals.

Setting of positioning completion amplitude

The positioning completion amplitude (Pn522) outputs a signal when the difference between the command position and the current position (position deviation: value of deviation counter) is smaller than the set value.

Pn522	Positioning completion amplitude				Position
	Setting range	Setting Unit	Factory setting	Effective time	Category
	0～1073741824	1 Command unit	10	Effective immediately	Setup

• This parameter setting has no influence on the final positioning accuracy.

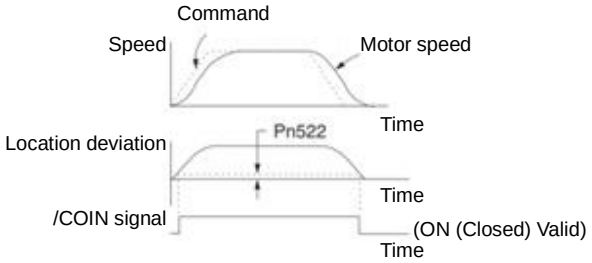

(Note) If the set value is too large and the deviation during low-speed operation is small, a constant /COIN signal may be output. When outputting the signal, please lower the set value until the signal is no longer output.

Setting of Output Time for Positioning Complete Output (/COIN) Signal

Command input condition can be added to the output condition of the /COIN signal to change the output time.

When used in a state where the positioning completion amplitude is small and the position deviation is generally small, it can be set to Pn207 = n.X□□□ (positioning completion output (/COIN) signal output time) to change the output time of the /COIN signal.

Parameter		Name	Content	Effective time	Category
Pn207	n.0□□□ [Factory setting]	Positioning completion output (/COIN) Signal Output Time	When the absolute value of the position deviation is smaller than the positioning completion amplitude (Pn522), the /COIN signal is output.	Power restart	Setup
	n.1□□□		When the absolute value of the position deviation is less than the positioning completion amplitude (Pn522) and the filtered command of the position command is 0, the /COIN signal is output.		
	n.2□□□		When the absolute value of the position deviation is smaller than the positioning completion amplitude (Pn522) and the position command input is 0, the /COIN signal is output.		

6.1.9 Position nearby output (/NEAR) signal

The near positioning output (/NEAR) signal is a signal notifying the near positioning completion position.

In position control, the upper device receives the positioning approach signal before confirming the positioning completion signal, thus preparing for the action sequence after positioning is completed. In this way, the time required for action when positioning is completed can be shortened.

This signal is usually used in pairs with the positioning completion output (/COIN) signal.

Type	Signal name	Connector pin number	Signal status	Meaning
Output	/NEAR	Distribution required	ON (closed)	Output when reaching the positioning completion approach point
			OFF (OFF)	The positioning completion approach point has not been reached.

(Note) /NEAR signal needs to be distributed. It can be set to Pn510=n.□□□X (distribution of positioning complete output (/NEAR) signal) and distributed to terminals.

Position the setting of NEAR output amplitude.

In Pn524 (NEAR Signal Amplitude), the condition for outputting the positioning proximity output (/NEAR) signal (positioning proximity amplitude) is set. The /NEAR signal is output when the difference between the command position and the current position (position deviation = deviation counter value) is less than the set value of Pn524.

Pn524	NEAR signal amplitude				Position
	Setting range	Setting Unit	Factory setting	Effective time	Category
	0～1073741824	1 Command unit	1073741824	Effective immediately	Setup

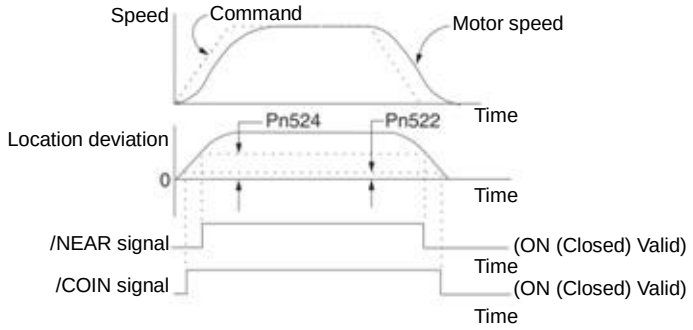

(Note) Generally, please set it to a value greater than Pn522 (positioning completion amplitude).

6.1.10 Speed limit function during torque control

The function of limiting the speed of a servo motor in order to protect machinery.

During torque control, the servo motor will be controlled in the form of output command torque, but the motor speed will not be controlled. Therefore, if a command torque greater than the mechanical side torque is input, the motor speed will be greatly increased. In this case, the speed must be limited by this function.

(Note) According to the load condition of the motor, there will be a certain gap between the limited speed of the motor and the set value.

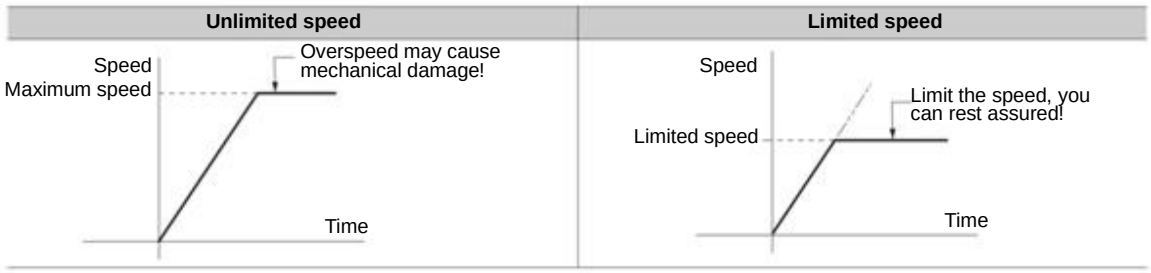

Speed limit detection output (/VLT) signal

The output signal of the motor speed after being limited is as follows.

Type	Signal name	Connector pin number	Signal status	Meaning
Output	/VLT	Distribution required	ON (closed)	Motor speed limitated
			OFF (OFF)	Motor speed is not limited

(Note) /VLT signal needs to be distributed. It can be set to Pn50F=n.□□X□ (distribution of speed limitation output (/VLT) signal) and distributed to terminals.

Selection of Speed Limit Value

The speed limit value is set via Pn002 = n.□□X□ (torque limit option). When set to Pn.002=n.□□1□ (external speed limit function), the smaller of the external speed limit value and the internal speed limit value is valid.

Parameter		Meaning	Effective time	Category
Pn002	n.□□0□	Appointment Parameters (Do Not Set)	Power restart	Setup
	n. □□1□ [Factory setting]	The speed limit value of torque control (VLIM command) is used as the speed limit value. (External Speed Limit Function)		

◆ Internal speed limit function

The limit value of the motor speed is set by Pn407 (speed limit during torque control).

In addition, through Pn408 = n □□X□ (speed limit selection), the upper speed limit value used for the speed limit value can be selected from "motor maximum speed" and "overspeed alarm detection speed". When limited by a speed equal to the maximum speed of the motor, select "Overspeed Alarm Detection Speed".

Parameter		Meaning	Effective time	Category
Pn408	n.□□0□ [Factory setting]	The speed limit value uses "motor maximum speed", the smaller of Pn407 settings.	Power restart	Setup
	n.□□1□	The speed limit value uses "speed detected by overspeed alarm", the smaller of the Pn407 set values.		

(Note) When using a rotary servo motor, Pn407 (speed limit during torque control) is set.

Pn407	Speed limit during torque control				Torque
	Setting range	Setting Unit	Factory setting	Effective time	Category
	0～10000	1 min^{-1}	10000	Effective immediately	Setup

(Note) Even if the set value exceeds the maximum speed of the servo motor used, the actual speed will be limited to the maximum speed of the servo motor used or the overspeed alarm detection speed.

◆External Speed Limit Function

When selecting the external speed limit function through Pn002=n.□□X□, the motor speed is limited by the speed limit value (VLIM).

6.2 Operation for Momentary Power Interruptions

By setting, even if the power supply of the servo drive main circuit is turned OFF instantaneously, the motor can cONtinue to be powered on (servo on) according to the time set by Pn509 (instantaneous power failure holding time).

Pn509	Transient outage holding time				Speed Position Torque
	Setting range	Setting Unit	Factory setting	Effective time	Category
	20～50000	1 ms	20	Effective immediately	Setup

When the instantaneous power failure time is less than the set value of Pn509, the motor will continue to be powered on, and when it is greater than the set value, the motor will no longer be powered on. When the main circuit power supply is restored, the motor will be powered back on.

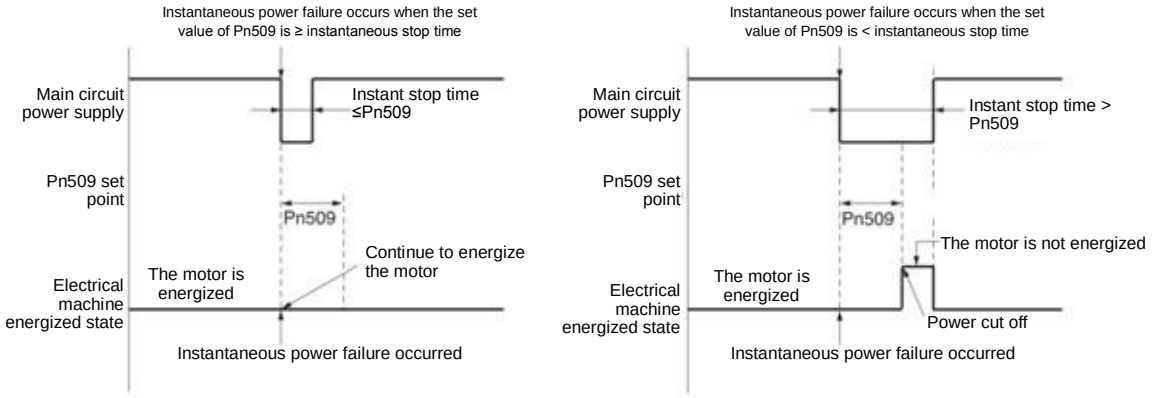

Supplementary notes

1. When the instantaneous power failure time is greater than the set value of Pn509, the servo ready output (/S-RDY) signal is OFF and the servo is OFF.
2. The control power supply and the main circuit power supply can cope with power outages of more than 5000ms when using non-power-off equipment.
3. The holding time of servo drive control power supply is about 100ms. The control power supply cannot be controlled during an instantaneous power failure. When the same processing as the normal power supply OFF operation is performed, the Pn509 setting will be invalid.

Important

The holding time of the main loop power supply varies depending on the output of the servo drive. This setting is invalid when the load of servo motor is large and "A.410 (under voltage alarm)" occurs during instantaneous power failure.

6.3 SEMI F47 Specification Support Function

SEMI F47 support function refers to the function of detecting A.971 (under voltage) warning and limiting the output current when the DC voltage of the main circuit inside the servo drive falls below the specified value due to instantaneous power failure or temporary low power supply voltage of the main circuit.

This function supports SEMI F47 specifications required by semiconductor manufacturing devices.

This function is used in combination with the setting function of the instantaneous power failure holding time (Pn509), and can continue to operate even when the power supply voltage is reduced, so that no shutdown is caused due to alarm, and no recovery operation is required.

Execution sequence

This function can be executed by a command issued by an upper device or a servo drive unit. Whether it is executed by the upper device or servo drive unit is selected by Pn008=n.□□X□ (function selection under voltage).

◆ When executed by the upper device (Pn008=n.□□1□)

Upper device limits the torque after receiving an under voltage (A.971) warning.
After receiving the undervoltage warning release signal, the torque limit is released.

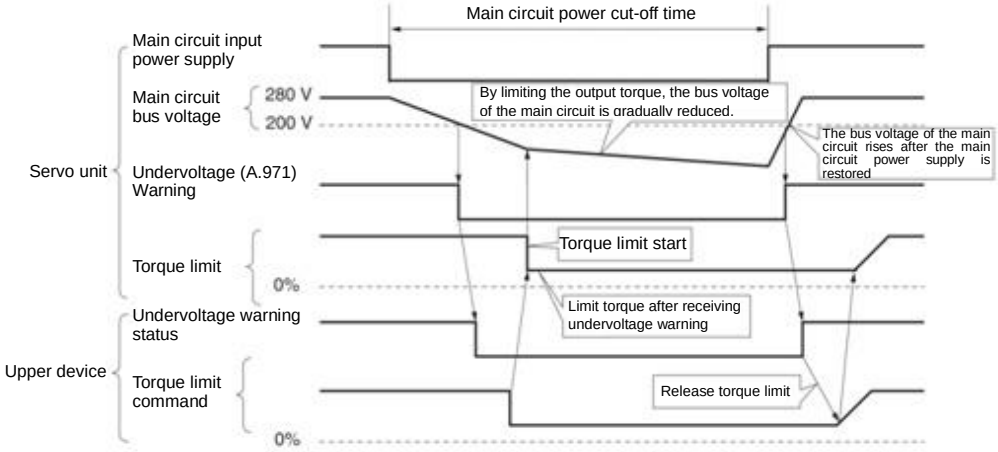

◆ When torque limitation is performed by servo drive unit (Pn008=n.□□2□)

According to the under-voltage warning, a torque limit is applied inside the servo drive.
After receiving the undervoltage warning release signal, the torque limit value is controlled inside the servo drive according to the set time.

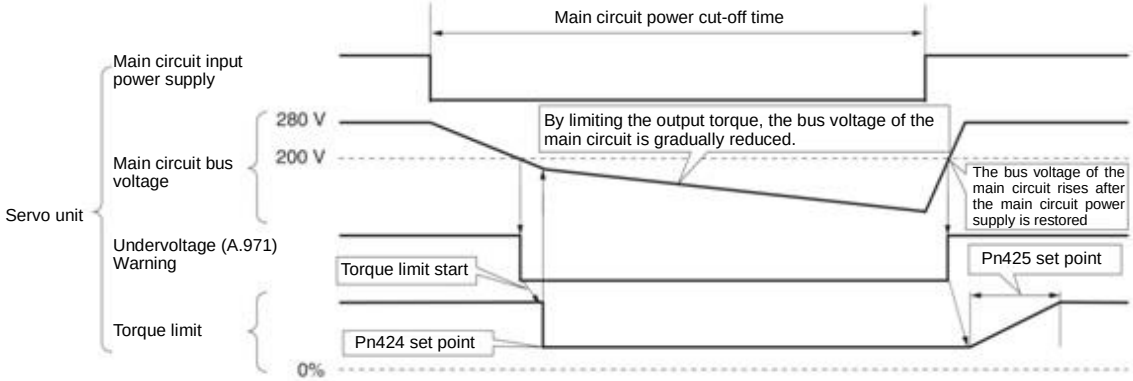

Setting of Undervoltage (A.971) Warning

Set whether A.971 (undervoltage) warning is detected.

Parameter		Meaning	Effective time	Category
Pn008	n.□□0□ [Factory setting]	Under voltage warning is not detected.	Power restart	Setup
	n. □□1□	The undervoltage warning is detected, and the torque limit is executed by the upper device.		
	n. □□2□	The undervoltage warning is detected, and torque limitation is performed by Pn424 (torque limitation when the main circuit voltage is reduced) and Pn425 (torque limitation is performed according to the torque limitation release time when the main circuit voltage is reduced). (executed by servo drive unit)		

◆ Relevant parameters

Parameters related to SEMI F47 specification support functions are as follows.

Pn424	Torque limitation when main loop voltage drops			Speed Position Torque	
	Setting range	Setting Unit	Factory setting	Effective time	Category
	10～100	1% *	50	Effective immediately	Setup

Pn425	Torque limit release time when main loop voltage drops.			Speed Position Torque	
	Setting range	Setting Unit	Factory setting	Effective time	Category
	10～1000	1 ms	100	Effective immediately	Setup
Pn509	Transient outage holding time			Speed Position Torque	
	Setting range	Setting Unit	Factory setting	Effective time	Category
	20～50000	1 ms	20	Effective immediately	Setup

* Percentage relative to rated torque of motor.
(Note) When using functions meeting SEMI F47 specifications, please set it to 1000 ms

Important

- This function is applicable to the instantaneous power failure of voltage and time within the scope specified in SEMI F47 specification. For the instantaneous power failure of voltage and time beyond this scope, standby UPS is required.
- When the power supply of the main circuit is restored, please use the torque limit set by the upper device or servo drive to prevent the output torque from being greater than the commanded acceleration torque.
- When used for vertical shafts, do not limit the torque below the holding torque.
- This function is to limit the torque within the servo drive capability in the power failure state, and is not applicable to all load conditions or operating conditions. Please be sure to set the parameters while confirming the action through the actual device.
- After setting the holding time of instantaneous power failure, the time from power cut-off to power cut-off of the motor will become longer. When the motor is powered off immediately, please use the servo OFF(SV_OFF)

6.4 Setting of Maximum Speed of Motor

The maximum speed of the servo motor is set by the following parameters.

Pn316	Maximum speed of motor			Speed Position Torque	
	Setting range	Setting Unit	Factory setting	Effective time	Category
	0～65535	1 min^{-1}	10000	Power restart	Setup

By reducing the maximum speed of the servo motor, the servo drive can realize the following processing.
- A.510 (overspeed alarm) occurs when the motor speed exceeds the set value.

Valid when changing parameter settings in the following situations.
- In order to protect the machinery, it is necessary to stop the operation of the machinery through an alarm when the set speed is exceeded.
- When the speed needs to be limited so that the motor drives the load above the allowable moment of inertia

6.5 Encoder frequency division pulse output

The encoder frequency division pulse output is a signal that is output to the outside in the form of 2-phase pulses (phase A and phase B) with a phase difference of 90 degrees after the servo drive internally processes the signal sent by the encoder. It is used as position feedback in the upper device.

The form of the signal and the output phase is as follows.

6.5.1 Signal output by encoder frequency division pulse

Type	Signal name	Connector pin number	Name	Remarks
Output	PAO+	CN1-19	Encoder frequency division pulse output phase A	When the encoder frequency-divided pulse is output, the number of pulses set by the encoder frequency-divided pulse number (Pn212) is the number of pulses that the motor rotates once. The phase difference between phase A and phase B is 90 degrees.
	PAO-	CN1-20		
	PBO+	CN1-21	Encoder frequency division pulse output phase B	
	PBO-	CN1-22		
	PCO+	CN1-23	Encoder frequency division pulse output phase C	The motor rotates once to output one pulse.
	PCO-	CN1-24		

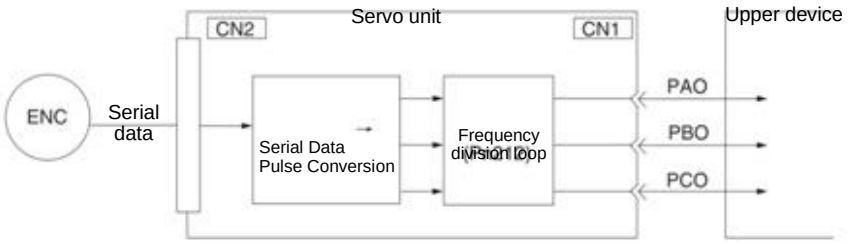

Output phase morphology

When rotating forward (forward direction) (phase b 90 leading)	When reversing (negative direction) (phase a 90 leading)
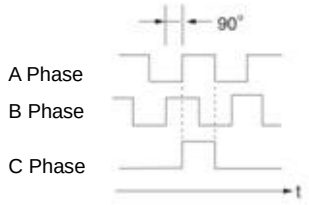	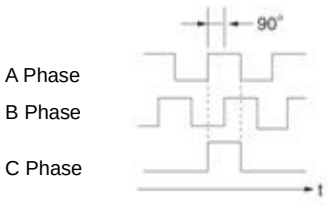

(Note) The pulse amplitude of the origin within the encoder 1 coil varies depending on the number of encoder divided pulses (Pn212) and the encoder output resolution (Pn281). Same amplitude as phase A.
In reverse (negative direction) mode (Pn000 = n.□□□1), the output phase shape is the same as the above figure.

Important

When performing mechanical origin reset operation through servo-driven C-phase pulse output, please make the servo motor run for more than 2 turns before operating. If this operation cannot be performed, please set the speed of the servo motor below 600 min^{-1}, and then perform origin reset. When the speed is above 600 min^{-1}, the C-phase pulse may not be correctly output.

6.5.2 Setting of Encoder frequency division pulse output

The following describes the setting method of encoder frequency division pulse output.

Encoder frequency division pulse count (Pn212) Settings

Pn212	Encoder frequency division pulse count				Speed Position Torque
	Setting range	Setting Unit	Factory setting	Effective time	Category
	16～1073741824	1 pitch /Rev	2500	Power restart	Setup

The number of pulses per revolution sent by the encoder is processed in the servo drive, and then is output after frequency division according to the set value of Pn212.

Please set the output number of encoder frequency division pulses according to the system specifications of mechanical and upper devices.

The setting of the frequency division pulse number of the encoder will be limited by the encoder resolution.

(Note) 1. The setting range of the encoder frequency division pulse number (Pn212) varies depending on the encoder resolution of the servo motor used. If the setting conditions in the above table cannot be met, A.041 (abnormal frequency division pulse output setting) will occur.
Example of correct setting: when Pn212 is 2500 [P/Rev]
Example of wrong setting: when Pn212 = 2501 [P/Rev] → setting scale is different from the above table, so output A.041
2. The upper limit of pulse frequency is about 1.6 Mpps. If the set value of encoder frequency division pulse number is too high, the speed of servo motor will be limited. If the upper limit of the motor speed in the above table is exceeded, A.511 (frequency division pulse output overspeed) will occur.

Output Example: When Pn212 = 16 (16 pulses per turn), the output examples of encoder frequency-divided pulse output phase A (PAO) signal and encoder frequency-divided pulse output phase B (PBO) signal are as follows.

Setting value: 16

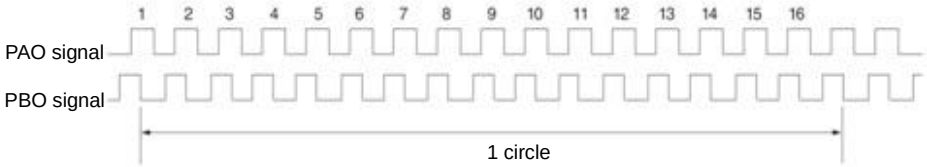

6.6 Soft limit function

The so-called soft limit refers to the function of forcibly stopping when the movable part of the machine exceeds the soft limit when no overtravel signal (P-OT, N-OT) is used.
When using soft time limit, the following settings are required.
•Set the soft limit function to active
•Set soft limit

6.6.1 The valid/invalid choice of soft limit function

The valid/invalid soft limit function is set by Pn801 = n.□□□X (soft limit function).
The soft limit function is effective in the following situations (determining the state of the origin of the mechanical coordinate system). In other cases, the soft limit function does not operate even if it exceeds the soft limit range.
• After completing the ZRET command
• After executing REFE = 1 command with POS_SET command
• When using the absolute value encoder, after completing the sensor ON (SENS_ON) command

Parameter		Meaning	Effective time	Category
Pn801	n.□□□0	Set both soft limits to be valid	Effective immediately	Setup
	n. □□□1	Set the forward turning side (forward direction) soft limit to be invalid		
	n. □□□2	The soft limit on the reverse (negative direction) side is invalidated.		
	n. □□□3 [Factory setting]	Set both soft limits to be invalid		

6.6.2 Setting of soft limit value

Set the soft limits on the forward and reverse sides.
The area needs to be set according to the direction, so be sure to set it to "reverse side soft limit value < forward side soft limit value".

Pn804	Forward side soft limit				Position
	Setting range	Setting Unit	Factory setting	Effective time	Category
	-1073741823～1073741823	1 Command unit	1073741823	Effective immediately	Setup
Pn806	Reverse side soft limit				Position
	Setting range	Setting Unit	Factory setting	Effective time	Category
	-1073741823～1073741824	1 Command unit	-1073741823	Effective immediately	Setup

6.6.3 Carry out soft limit check according to commands

Set whether soft limit check is carried out when commands such as POSING or INTERPOLATE are sent to the target location. If the target position exceeds the soft limit, deceleration stop is executed at the position where the soft limit is set.

Parameter		Meaning	Effective time	Category
Pn801	n.□0□□ [Factory setting]	No command soft limit check	Effective immediately	Setup
	n.□□□1	There is command soft limit check		

6.7 Selection of torque limit

Torque limitation is the function of limiting the output torque of servo motor.

There are four kinds of torque limitation modes, and the summary of each limitation mode is as follows.

Mode of restriction	Summary	Control mode	Remarks
Internal torque limit	Torque is normally limited by parameters.	Speed control Position control Torque control	
Exterior torque limit	Torque is limited by an input signal from an upper device.		
Torque Limits for Command-Based TLIM Data *	Through the commanded TLIM data, torque limitation is arbitrarily performed.	Speed control Position control	
Torque limit of P_CL, N_CL based on servo command output signal (SVCMD_IO) *	Torque is limited by P_CL, N_CL of the servo command output signal (SVCMD_IO).		

(Note) Even if the set value exceeds the maximum torque of the servo motor used, the actual torque will be limited within the maximum torque of the servo motor.

6.7.1 Internal torque limit

The internal torque limit limits the maximum output torque at a constant time by the torque limit values set by the forward torque limit (Pn402) and the reverse torque limit (Pn403).

Pn402	Forward rotation torque limit			Speed Position Torque	
	Setting range	Setting Unit	Factory setting	Effective time	Category
	0～800	1% *	800	Effective immediately	Setup
Pn403	Reversal torque limit			Speed Position Torque	
	Setting range	Setting Unit	Factory setting	Effective time	Category
	0～800	1% *	800	Effective immediately	Setup

* Percentage relative to rated torque of motor.

(Note) If the set values of Pn402 and Pn403 are too small, insufficient torque may occur during acceleration and deceleration of the servo motor.

No internal torque limit (maximum torque output)	There is internal torque limit
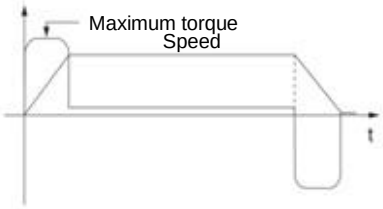	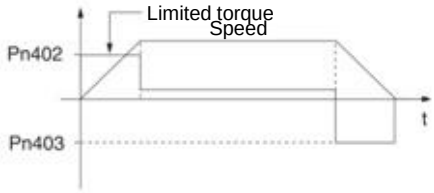

6.7.2 Exterior torque limit

When the machine needs torque limitation under certain operating conditions, the upper device sends an ON or OFF signal to implement torque limitation.
It can be used for pushing and stopping action or holding the workpiece of the robot stably.

Command signal for external torque limitation

The command signals for external torque limitation include a forward rotation side external torque limitation input (/P-CL) signal and a reverse rotation side external torque limitation input (/N-CL) signal. The command signal for forward rotation side torque limitation is /P-CL signal, and the command signal for reverse rotation side torque limitation is /N-CL signal.

Type	Signal name	Connector pin number	Signal status	Meaning
Input	/P-CL	Distribution required	ON (closed)	The external torque ON the forward rotation side is limited to ON. Limit value: the smaller of the set values of Pn402 and Pn404
			OFF (OFF)	The external torque on the forward rotation side is limited to OFF. Limit value: Pn402
Input	/N-CL	Distribution required	ON (closed)	The external torque ON the reversal side is limited to ON. Limit value: the smaller of the set values of Pn403 and Pn404
			OFF (OFF)	The external torque on the reversal side is limited to OFF. Limit value: Pn403

(Note) /P- CL signal,/N- CL signal needs to be distributed. The following parameters can be used to assign to terminals.

- Pn50B = n.□X□□ (distribution of external torque limit input (/P-CL) signal on forward rotation side)
- Pn50B = n.X□□□ (distribution of reverse side external torque limit input (/N-CL) signal)

Setting of torque limit

The parameters related to the set torque limit value are as follows.
If the set values of Pn402 (forward rotation torque limit), Pn403 (reverse rotation torque limit), Pn404 (forward rotation side external torque limit), and Pn405 (reverse rotation side external torque limit) are too small, insufficient torque may occur during acceleration and deceleration of the servo motor.

Pn402	Forward rotation torque limit			Speed Position Torque	
	Setting range	Setting Unit	Factory setting	Effective time	Category
	0～800	1% *	800	Effective immediately	Setup
Pn403	Reversal torque limit			Speed Position Torque	
	Setting range	Setting Unit	Factory setting	Effective time	Category
	0～800	1% *	800	Effective immediately	Setup
Pn404	Forward rotation torque limit			Speed Position Torque	
	Setting range	Setting Unit	Factory setting	Effective time	Category
	0～800	1% *	100	Effective immediately	Setup
Pn405	Reversal torque limit			Speed Position Torque	
	Setting range	Setting Unit	Factory setting	Effective time	Category
	0～800	1% *	100	Effective immediately	Setup

* Percentage relative to rated torque of motor.

Output torque variation at external torque limit

Indicates the output torque when the internal torque limit is set to 800%.
The rotation direction of the motor is set to Pn000 = n.□□□0 (with CCW direction as forward rotation) as an example.

Signal	State	/P-CL OFF	/P-CL ON
/N-CL	OFF	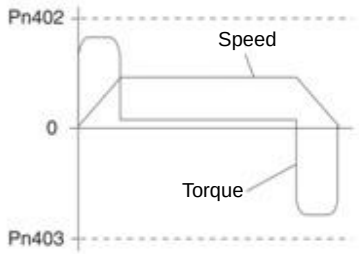	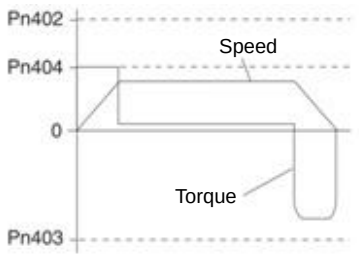
	ON	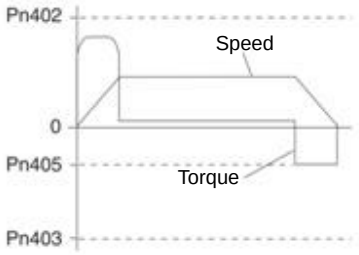	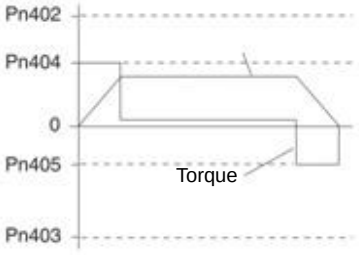

6.7.3 Torque limit detection output (/CLT) signal

The /CLT signal indicating the motor output torque limit state is as follows.

Type	Signal name	Connector pin number	Signal status	Meaning
Input	/CLT	Distribution required	ON (closed)	The motor output torque is limited.
			OFF (OFF)	The motor output torque is not limited

(Note) /CLT signal needs to be distributed. It can be set to Pn50F = n.□□□X (distribution of torque limit output (/CLT) signal) and distributed to terminals.

6.8 Absolute position

The absolute value encoder will still remember the current position of the stop position after the power supply is turned OFF.

In a system using an absolute value encoder, the current position can be grasped by an upper controller. Therefore, when the system is powered on, there is no need to perform the origin reset operation.

There are three encoders for servo motors. Each encoder can be specified by setting Pn002 = n.□X□□.

• Parameter Setting When Using Incremental Encoder

Parameter		Meaning	Effective time	Category
Pn002	n.□0□□ [Factory setting]	Used as incremental encoder. No battery is required.	Power restart	Setup
	n.□1□□	Used as incremental encoder. No battery is required		
	n.□2□□	Used as 1 coil absolute value encoder. No battery is required.		

•Parameter setting when using 1-turn absolute value encoder

Parameter		Meaning	Effective time	Category
Pn002	n.□0□□ [Factory setting]	Used as 1 coil absolute value encoder. No battery is required.	Power restart	Setup
	n.□1□□	Used as incremental encoder. No battery is required		
	n.□2□□	Used as 1 coil absolute value encoder. No battery is required.		

• Parameter setting when using multiple coil absolute value encoder

Parameter		Meaning	Effective time	Category
Pn002	n.□0□□ [Factory setting]	Used as multiple coils absolute value encoder. A battery is needed.	Power restart	Setup
	n.□1□□	Used as incremental encoder. No battery is required		
	n.□2□□	Used as 1 coil absolute value encoder. No battery is required.		

Notice
• Please install the battery on either side of the upper device or encoder cable. If batteries are installed on the upper device and encoder cable at the same time, a circulation loop will be formed between the batteries, resulting in product damage or burning.

6.9 Forced stop function

The forced stop function refers to the function of forcibly stopping the servo motor by a signal from an upper device or an external device.

When forced stop is used, distribution of the forced stop input (FSTP) signal (Pn516 = n.□□□X) is required. There are three methods for stopping the motor: dynamic brake (DB) stop, free running stop and deceleration stop.

(Note) The forced stop function is different from the hardware base blocking (HWBB) function and is not a function specified in the safety standard. Please note.

Note: Panel display and operator display
When forced to stop, "FSTP" will be displayed on the panel display and the digital operator.

6.9.1 Forced Stop Input (FSTP) Signal

Type	Signal name	Connector pin number	Signal status	Meaning
Input	FSTP	Distribution required	ON (closed)	Driveable (normal operation)
			OFF (OFF)	The motor stopped running.

(Note) FSTP signal needs to be distributed. It can be distributed to terminals through Pn516 = n.□□□X (distribution of forced stop input (FSTP) signal).

6.9.2 Selection of Stop Method for Forced Stop Function

The stop method of the forced stop function is selected through Pn00A=n.□□X□ (stop method at forced stop).

Parameter		Meaning	Effective time	Category
Pn00A	n.□□0□	DB stop or free operation stop (stop method is the same as Pn001 = n.□□□X).	Power restart	Setup
	n.□□1□ [Factory setting]	The set torque of Pn406 is used as the maximum torque to decelerate and stop the motor. The state after stopping depends on the setting of Pn001 = n.□□□X.		
	n.□□2□	The set torque of Pn406 is taken as the maximum torque to decelerate and stop the motor, and then enter the free running state.		
	n.□□3□	According to the deceleration time of Pn30A, the motor is decelerated and stopped. The state after stopping depends on the setting of Pn001 = n.□□□X		
	n.□□4□	According to the deceleration time of Pn30A, the motor will decelerate and stop, and then enter the free running state.		

(Note) During torque control, deceleration cannot be stopped. According to the setting of Pn001 = n. □□□X (servo OFF and stop method in case of Gr.1 alarm), the dynamic brake stops or the free operation stops.

When the emergency stop torque (Pn406) is set to stop the servo motor

When the emergency stop torque is set to stop the servo motor, Pn406 (Emergency Stop Torque) is set.

When Pn001=n.□□X□ is set to 1 or 2, the servo motor will be decelerated with the set torque of Pn406 as the maximum value.

The factory setting is "800%". This is a large enough value to ensure that the servo motor must output maximum torque. However, the actual effective maximum limit of emergency stop torque is the maximum torque of the servo motor.

Pn406	Emergency stop torque				Speed / Position / Torque
	Setting range	Setting Unit	Factory setting	Effective time	Category
	0～800	1% *	800	Effective immediately	Setup

* Percentage relative to rated torque of motor.

When the servo motor is stopped by setting the deceleration time (Pn30A) during servo OFF and forced stop

When setting the deceleration time of the servo motor to stop the servo motor, Pn30A (deceleration time at servo OFF and forced stop) is set.

Pn30A	Deceleration Time for Servo OFF and Forced Stop			Speed	Position
	Setting range	Setting Unit	Factory setting	Effective time	Category
	0～10000	1 ms	0	Effective immediately	Setup

When Pn30A is set to "0", zero speed stops.
The deceleration time set by Pn30A is the time from the highest speed of the motor to the stop of the motor.

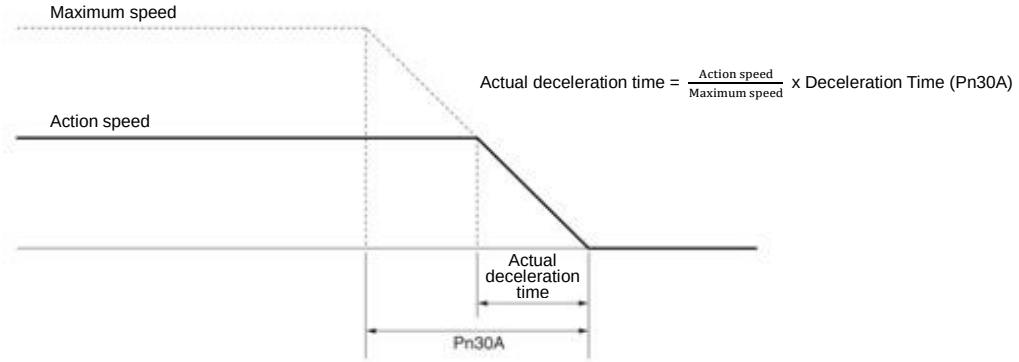

6.9.3 Methods of Recovery from Compulsory Stop

The recovery method when the operation is stopped by the forced stop input (FSTP) signal is as follows.

If a servo ON (SV_ON) command is received when the forced stop input (FSTP) signal is OFF, the forced stop state will remain unchanged even if the FSTP signal is set to ON.

Enter the servo OFF (SV_OFF) command, and after entering the base blocking (BB) state, please enter the servo ON (SV_ON) command again.

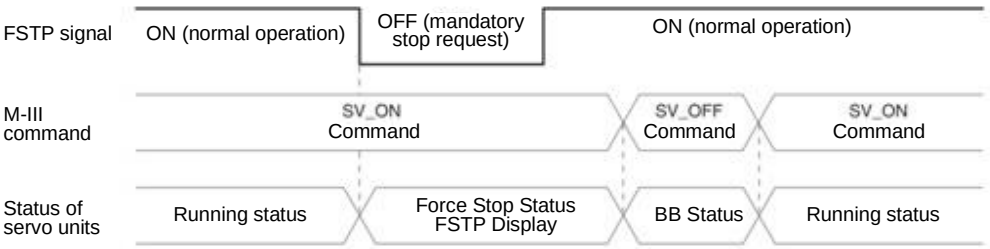

Chapter 7 Trial operation

Introduce the process and operation steps of the trial run and the functions that are convenient to use during the trial run.

7.1 Commissioning process

7.1.1 Process of servo motor test run

The steps of the trial run are as follows.

Steps	Content
1	Settings and installation Set the servo motor and servo drive according to the setting conditions. First of all, confirm the action when there is no load. The servo motor is not connected to the mechanical system here.
2	Wiring, connection Connect to the servo drive. Confirm the action of a single servo motor. Here, CN1 of servo drive is not connected.
3	Confirmation before commissioning
4	Connect to the power
5	Setting of Absolute Value Encoder This setting is made when only servo motors with absolute value encoders are used.

7.2 Inspection and Precautions Before Commissioning

In order to carry out the trial run safely and correctly, please confirm the following items before the trial run.

- The setting, wiring and connection of servo drive and servo motor have been carried out correctly.
- The power supply voltage for servo drive is normal.
- The fastening parts of the servo motor are not loose.
- When using servo motor with oil seal, the oil seal is not damaged. And oil has been applied.
- When using servo motors stored for a long time, the maintenance and inspection of servo motors have been completed.
- For the maintenance and inspection essentials of servo motor, please refer to the manual for using servo motor.
- Servo motors with brakes have previously released the brakes. When releasing the brake, the specified voltage (DC24 V) must be applied to the brake. Examples of circuits for commissioning are as follows.

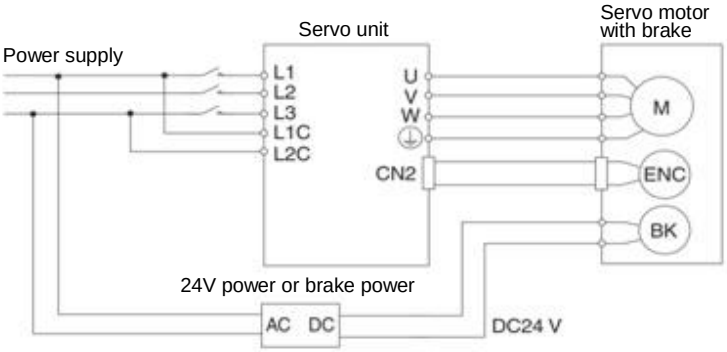

7.3 Commissioning of Servo Motor Unit

The JOG operation function is used during the trial operation of the servo motor unit.
JOG operation refers to the function of driving the servo motor at the preset JOG speed (rotation speed) without connecting the upper device and confirming the action of the servo motor.

△,!Notes
• The over-travel prevention function is invalid during JOG operation. At the same time of operation, the operating range of the machine must be considered.

7.3.1 Confirmation before execution

To run JOG, the following confirmation must be made in advance.

- The write inhibit setting of the parameter is not set to "write inhibit".

- The main circuit power supply must be ON.
- No alarm has occurred.
- Hardware Base Blocking (HWBB) function must be invalid.
- Must in servo OFF state.
- The setting of JOG speed must take into account the operating range of the machine used.

Set the JOG speed through the following parameters.

Pn304	Jog (JOG) speed			Speed Position Torque	
	Setting range	Setting Unit	Factory setting	Effective time	Category
	0～10000	1 min^{-1}	500	Effective immediately	Setup
Pn305	Soft start acceleration time			Speed	
	Setting range	Setting Unit	Factory setting	Effective time	Category
	0～10000	1 ms	0	Effective immediately	Setup
Pn306	Soft start deceleration time			Speed	
	Setting range	Setting Unit	Factory setting	Effective time	Category
	0～10000	1 ms	0	Effective immediately	Setup

7.3.2 Operable tool

The executable operations for JOG operation are as follows

Operating tool	Distribution
Panel operator	Fn002
iWatch+ debugging software	[JOG Operation]

Chapter 8 Panel Display and Use of Panel Operators

8.1 Panel operator

8.1.1 Name and function of panel operator keys

The panel operator consists of a panel display part and panel operator keys.
The panel operator can display the status, perform auxiliary functions, set parameters and monitor the action of servo drive.

The name and function of the panel operator keys are as follows.

Key	Name	Function
F	Function key	Toggle basic mode: Status display, auxiliary functions, parameter setting and monitoring
S	Settings key	Press this key to display the settings and set values of each parameter, enter the parameter setting state and clear the alarm.
▲	UP key	Press the UP key to increase the set value When the auxiliary function mode JOG is running, it acts as a forward rotation start key.
▼	DOWN key	Press the DOWN key to decrease the set value When the auxiliary function mode JOG is running, it acts as a reverse start key.
◀	Shift key	Press this key to move the selected bit (the decimal point of the bit flashes) one bit to the left.

8.1.2 Switching of functions

By switching the functions of the panel operator, it is possible to display the operation status, set parameters, switch operation commands and other functions.

Functions include status display mode, parameter setting mode, monitoring mode and auxiliary function mode. After pressing the F key, the modes are switched in the order shown in the following figure.

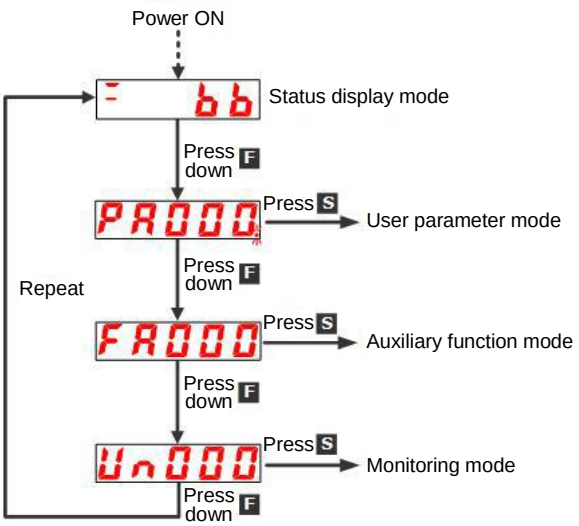

补充说明 After setting Pn52F (monitoring display when power is turned on), the display content after power is turned on can be set in monitoring display (non-state display).

Please set the un number to be displayed when the power is turned on in Pn52F.

Pn52F	Monitoring display when power is turned on			Speed Position Torque	
	Setting range	Setting Unit	Factory setting	Effective time	Category
	0000 ～ 0FFF	-	0FFF	Effective immediately	Setup

When set to 0FFF [factory setting], the status will be displayed when the power is turned on.

8.1.3 Status display mode

The status is shown below.

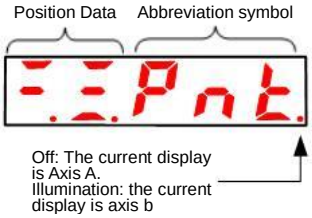

■ Display Contents of Bit Data

Display	Meaning
	Control power supply ON Display When the servo control power supply is on, it lights up. When the servo control power supply is OFF, it goes out.
	Power ready display The main circuit lights up when the power supply is ON. Goes out when the main circuit power supply OFF.
	Base blocking display Lights when servo is OFF. Goes out when servo ON.
	Speed Consistent Output (/V-CMP) Signal Display (During Speed Control) If the difference between the speed of the servo motor and the commanded speed is within the specified value (set by Pn503 or Pn582 and factory set value is 10min^{-1} or 10mm/s), it will be on and off if it exceeds the specified value. However, the light is always on during torque control. Add: When the command voltage is affected by noise, the "-"symbol on the upper digit on the left side of the panel operator will flash. Please refer to the following to take anti-interference measures. **Positioning Complete (/COIN) Display (When Position Control)** If the deviation between the position command and the actual position of the motor is within the specified value (set by Pn522 and factory setting value is 7 command units), it will go out if it exceeds the specified value.
	Displays the rotation detection output (/TGON) signal When the rotation speed of the servo motor is higher than the specified value (set by Pn502 or Pn581, and the factory setting value is 20min^{-1} or 20mm/s), it will be turned on, and when it is lower than the specified value, it will be turned off.
	Displayed in speed command input (during speed control) The input speed command lights up when it is higher than the specified value (set by Pn502 or Pn581, factory setting is 20min^{-1} or 20mm/s), and goes out when it is lower than the specified value. **Displayed in command pulse input (during position control)** Lights when command pulse is input. Off when no clear signal is input.
	Displayed in torque command input (during torque control) The input torque command lights up when it is greater than the specified value (10% of the rated torque), and goes out when it is less than the specified value. **Clear the display in the signal input (during position control)** Lights when a clear signal is input. Off when no clear signal is input.
	During high speed bus control CN3 terminal input status.
	During high speed bus control CN4 terminal input status.

■ Display Contents of Thumbnail Symbols

Abbreviation symbol	Meaning of the contents
	Base blockade Display servo OFF state.
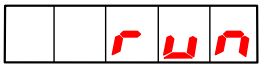	Running Display servo ON status

Abbreviation symbol	Meaning of the contents
Pot	Prohibit forward-turning side drive state Indicates that the inhibit forward drive input (P-OT) signal is in an open circuit state.
not	It is forbidden to reverse the side drive state. Indicates that the inhibit reverse side drive input (N-OT) signal is in an open circuit state.
Pnt	The forward and reverse side drive states are prohibited Indicates that the forward-rotation-prohibited side drive input (P-OT) signal and the reverse-rotation-prohibited side drive input (N-OT) signal are in an open circuit state.
FSt	Force Stop Status Indicates that the servo drive is in a forced stop state after receiving a forced stop input (FSTP) signal.
tSt	No motor test function in progress Indicates a state in which no motor test function is being performed.
020	Alarm status Blinking display Alarm number

8.2 Operation of Parameters (PA□□□) in Panel Operator

Displays the number beginning with PA on the panel operator.

The following describes how to set the parameters used in this manual.

8.2.1 Setting Method of "Numerical Setting Type"

The following describes the setting method of numerical setting type, taking the setting value of speed loop gain (Pn100) from 40.0 to 100.0 as an example.

Steps	Display after operation	Operation key	Operation
1	PA000	F	Press the F key to select the parameter mode. In case of dual-axis drive, long press F key more than 3 seconds, and Axis A and Axis B will be switched alternately.
2	PA 100	▲ ▼	Press UP or DOWN to display "Pn100".
3	0040.0	S	Press S key to display the current set value of Pn100.
4	0040.0	◀	Press the left key to move the flashing digits to make 4 flashing. (You can change the number of digits displayed by blinking.)
5	0100.0	▲	Press the UP key 6 times to change the set value to "100.0".
6	0100.0	F	After pressing the F key, the value display will flash. In this way, the set value changes from 40.0 to 100.0.
7	PA 100	S	Press S key to return to the display of "Pn100".

◆ When the setting range is above 6 bits

Since the panel operator can only display 5 digits, the settings above 6 digits are shown as follows.

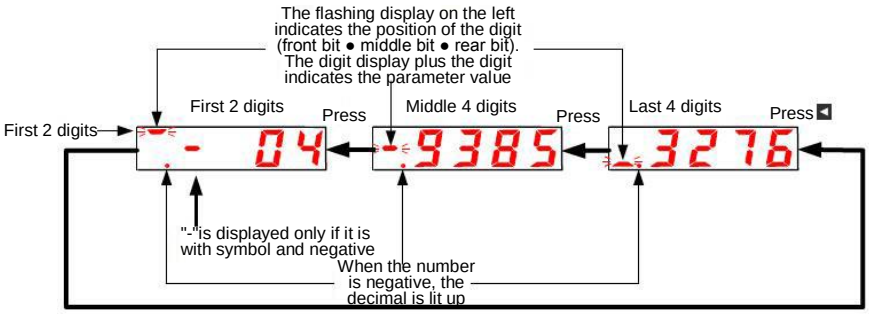

8.2.2 Setting Method of "Function Selection Type"

The function selection type sets various functions by selecting from the functions assigned to each digit of the display number of the panel operator.
The following describes the setting method of the function selection type, taking the control mode selection (Pn000.1) of the function selection basic switch (PA000) from speed control to position control as an example.

Steps	Display after operation	Operation key	Operation
1	PA000	F	Press the F key to select the parameter mode. If the parameter number does not show Pn000, press the UP or DOWN key to show "Pn000". In case of dual-axis drive, long press F key will be used for more than 3 seconds, and Axis A and Axis B will be switched alternately.
3	n.0000	S	Press S key to display the current set value of Pn000.
4	n.0000	◀	Press the left key to move the flashing digits. (You can change the number of digits displayed by blinking.)
5	n.0010	▲	Press the UP key once to change the setting value to "n.0010". (Change speed control to position control.)
6	n.0010	F	After pressing the F key, the value display will flash. In this way, the control mode becomes position control.
7	PA000	S	Press S key to return to the display of "Pn000".

8.3 The operation of the monitor display (Un□□□) in the panel operator

A function of monitoring (displaying) the command value set in the servo drive, the state of input and output signals, and the internal state of the servo drive.
Displays the number beginning with UA on the panel operator.

Display Example (Motor Speed)

Un000

The following describes the basic operation of monitoring display and the discrimination method of display as a special monitoring number.

■ List of Monitoring and Display Functions

Surveillance number	Displaying contents	Unit
Un000	Revolving speed of motor	1r/min
Un001	Speed reference	1r/min
Un002	Torque reference	1%
Un003	Rotation angle 1	Encoder pulse
Un004	Rotation angle 2	deg
Un005	Input signal monitoring	
Un006	Monitoring of the output signal	
Un007	Input Reference pulse speed	1r/min
Un008	Position Error Amount	Command unit
Un009	Accumulated load rate	1%
Un00A	Regeneration load ratio	1%
Un00B	DB resistor power consumption	1%
Un00C	Input reference pulse counter	Command unit
Un00D	Feedback pulse counter	Encoder pulse
Un013	Feedback pulse counter	Command unit
Un020	Rated speed of motor	1r/min
Un021	Maximum speed of motor	1r/min
Un040	Absolute encoder Multiturn Data	Coil
Un041	Position within 1 coil of absolute value encoder	Encoder pulse
Un140	DC BUS voltage	1V

8.3.1 Basic operation of monitoring display

The following description will take Un000 (motor rotation speed) as an example.

Steps	Display after operation	Operation key	Operation
1	Un000	F	Press the F key to select the auxiliary function. If the parameter number does not show UA000, press the UP or DOWN key to show "UA000".
2	1000	S	Press S key to display the current motor speed. When there is no red dot in the lower right corner of the dual-axis drive, the A-axis data is displayed.
3	1500.	▲ ▼	When there is a red dot in the lower right corner of the dual-axis drive, the B-axis data will be displayed. Press the UP or DOWN key to switch the A axis and the B axis alternately.
3	Un000	S	Press the S key to return to the display of step 1.

8.3.2 Monitoring of input and output signals (Un005/ Un006)

Use Un005/ Un006 to display the assigned signal status in the segment (LED) of the panel operator.

◆ Display discrimination method

< segment (led) >

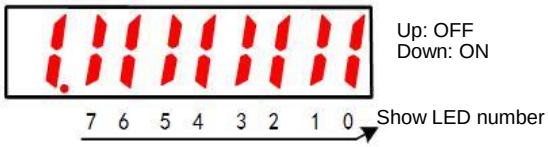

The input signal OFF corresponding to the LED number is displayed: the upper segment lights up
The input signal ON corresponding to the LED number is displayed: the lower segment lights up

The distribution table is as follows.

Surveillance number	Show LED number	Needle number
Un005	0	IN0（CN1-14）
	1	IN1（CN1-15）
	2	IN2（CN1-16）
	3	IN3（CN1-17）
	4	IN4（CN1-39）
	5	IN5（CN1-40）
	6	IN6（CN1-41）
	7	IN7（CN1-42）
Un006	0	OUT0（CN1-7, -8）
	1	OUT1（CN1-9, -10）
	2	OUT2（CN1-11, -12）
	3	OUT3（CN1-32, -33）
	4	OUT4（CN1-34, -35）
	5	OUT5（CN1-36, -37）

8.4 Operation of Auxiliary Function (FA□□□) in Panel Operator

The auxiliary function is used to perform functions related to setting and adjusting the servo drive.
Displays the number beginning with FA on the panel operator.
Display Example (JOG Run)

The following describes the operation steps when using the panel operator. Please refer to the contents of each function for confirmation items and relevant parameters before execution.

■ List of auxiliary function execution modes

Auxiliary function number	Function
FA000	Display Alarm History
FA002	JOG
FA003	Origin search
FA004	JOG run
FA005	Initialization parameter
FA006	Clear Alarm History
FA008	Reset Absolute Encode
FA009	Autotune Analog (Speed/ Torque) Reference Offset
FA00A	Manually adjust the speed reference offset
FA00B	Manually adjust torque reference offset
FA00E	Autotune Motor Current Detection Signal Offset
FA010	Write inhibit setting of parameters
FA011	Displays the motor model information.
FA012	Displays the servo software version
FA203	One-parameter tuning.
FA206	Easy FFT
FA208	Load inertia/mass detection

8.4.1 Display of alarm records (FA000)

Please refer to the following contents besides the operation steps

Steps	Display after operation	Operation key	Operation
1	FA000	F	Press the F key to select the auxiliary function. If the parameter number does not show FA000, press the UP or DOWN key to show "FA000". In case of dual-axis drive, long press F key more than 3 seconds, and Axis A and Axis B will be switched alternately.
2	0. 810	S	Press S key to display the latest alarm.
3	1. C90	▲ ▼	Every time the DOWN key is pressed, an old alarm is displayed back. Each time the UP key is pressed, a new alarm will be displayed in the future. The larger the number in the left digit, the older the alarm displayed.
4	FA000	S	Press the S key again to return to the display of "FA000".

8.4.2 JOG operation (FA002)

Please refer to the following contents besides the operation steps

Steps	Display after operation	Operation key	Operation
1	FA000	F	Press the F key to select the auxiliary function. In case of dual-axis drive, long press F key more than 3 seconds, and Axis A and Axis B will be switched alternately.
2	FA002	▲ ▼	UP or DOWN key display "FA002".
3	-. .JoG	S	Press S key, and the display content is shown in the left figure.

Steps	Display after operation	Operation key	Operation
4	JoG	F	Press F key to enter servo ON state.
5	JoG	▲ ▼	Press the UP key (forward rotation) or the DOWN key (reverse rotation), during which the servo motor rotates at the speed set by Pn304 or Pn383.
6	JoG	F	Press MODE/SET key to enter servo OFF state.
7	FA002	S	Press the S key again to return to the display of "FA002".

8.4.3 Origin search (FA003)

Please refer to the following contents besides the operation steps

Steps	Display after operation	Operation key	Operation
1	FA000	F	Press the F key to select the auxiliary function.
2	FA003	▲ ▼	UP or DOWN key display "FA003".
3	CSr	S	Press S key, and the display content is shown in the left figure.
4	CSr	F	Press F key to enter servo ON state.
5	CSr	▲ ▼	Press the UP key and the servo motor will rotate forward. Press the DOWN key and the servo motor will reverse.
6	CSr	F	After the origin search of the servo motor is completed, it will change to flashing display. At this time, the servo motor enters the servo lock state at the origin within 1 coil of the encoder.
7	FA003	S	Press the S key again to return to the display of "FA003".

8.4.4 Program JOG run (FA004)

Please refer to the following contents besides the operation steps

Steps	Display after operation	Operation key	Operation
1	FA000	F	Press the F key to select the auxiliary function.
2	FA004	▲ ▼	UP or DOWN key display "FA004".
3	PJoG	S	Press S key, and the display content is shown in the left figure.
4	PJoG	F	Press F key to enter servo ON state.
5	PJoG	▲ ▼	Press the UP key or DOWN key that conforms to the initial operation direction of the operation mode, and the operation will start after the set waiting time.
6	PJoG	-	If the program JOG runs to an End, it will flash "End" and return to the display in the left Figure. If you press the S key, return to step 2.

8.4.5 Initialization of parameter settings (FA005)

Please refer to the following contents besides the operation steps

Steps	Display after operation	Operation key	Operation
1	FA000	F	Press the F key to select the auxiliary function.
2	FA005	▲ ▼	UP or DOWN key display "FA005".
3	P.init	S	Press S key, and the display content is shown in the left figure.
4	P.init	F	Press F key to initialize parameters. After initialization is completed, flash "donE" and return to the display on the left.

8.4.6 Deletion of Alarm records (FA006)

Please refer to the following contents besides the operation steps

Steps	Display after operation	Operation key	Operation
1	FA000	F	Press the F key to select the auxiliary function.
2	FA006	▲ ▼	UP or DOWN key display "FA006".
3	trCLr	S	Press S key, and the display content is shown in the left figure.
4	trCLr	F	Press F to delete the alarm record. "donE" will flash and return to the display on the left after the deletion is completed.
5	FA006	S	Press the S key again to return to the display of "FA006".

8.4.7 Absolute value encoder Setup（initialization）（FA008）

Please refer to the following contents besides the operation steps

Steps	Display after operation	Operation key	Operation
1	FA000	F	Press the F key to select the auxiliary function.
2	FA008	▲ ▼	UP or DOWN key display "FA008".
3	PGCL1	S	Press S key, and the display content is as shown in the left figure, and "PGCL1" is displayed.
4	PGCL5	▲	Press and hold the UP key until PGCL5 is displayed.
5	donE	F	Press F key to start setting (initializing) the absolute value encoder. "donE" flashes for about 1 second after the setting (initialization) is completed.
6	PGCL5	-	Return to the display of "PGCL5" after "donE" is displayed.
7	FA008	S	Press the S key again to return to the display of "FA008".

8.4.8 Automatic Adjustment of Analog (Speed and Torque) Command Bias (FA009)

Please refer to the following contents besides the operation steps

Steps	Display after operation	Operation key	Operation
1	FA000	F	Press the F key to select the auxiliary function.
2	FA009	▲ ▼	UP or DOWN key display "FA009".
3	rEF_o	S	Press S key, and the display content is as shown in the left figure, and "rEF_o" is displayed.
4	rEF_o	F	"donE" will flash and then switch to the display on the left when the f key is pressed.
5	FA009	S	Press the S key again to return to the display of "FA009".

8.4.9 Manual Adjustment of Speed Command Bias (FA00A)

Please refer to the following contents besides the operation steps

Steps	Display after operation	Operation key	Operation
1	FA000	F	Press the F key to select the auxiliary function.
2	FA00A	▲ ▼	UP or DOWN key display "FA00A".
3	-. .SPd	S	Press S key, and the display content is shown in the left figure.
4	-. .SPd	-	Turn ON the servo from the outside to display the content on the left.
5	00000	S	Press the S key to display the current offset.
6	00008	▲ ▼	Press the UP or DOWN key to adjust and stop the servo motor. This value is the offset.
7	-. .SPd	F	"donE" will flash and then switch to the display on the left when the f key is pressed.
8	FA00A	S	Press the S key again to return to the display of "FA00A".

8.4.10 Manual Adjustment of Torque Command Bias (FA00B)

Please refer to the following contents besides the operation steps

Steps	Display after operation	Operation key	Operation
1	FA000	F	Press the F key to select the auxiliary function.
2	FA00b	▲ ▼	UP or DOWN key display "FA00b".
3	-. .trq	S	Press S key, and the display content is shown in the left figure.
4	-. .trq	-	Turn ON the servo from the outside to display the content on the left.

Steps	Display after operation	Operation key	Operation
5	00000	S	Press the S key to display the current offset.
6	00003	▲ ▼	Press the UP or DOWN key to adjust and stop the servo motor. This value is the offset.
7	donE	F	"donE" will flash and then switch to the display on the left when the f key is pressed.
8	FA00b	S	Press the S key again to return to the display of "FA00b".

8.4.11 Automatic Adjustment of Offset of Motor Current Detection Signal（FA00E）

Please refer to the following contents besides the operation steps

Steps	Display after operation	Operation key	Operation
1	FA000	F	Press the F key to select the auxiliary function.
2	FA00E	▲ ▼	UP or DOWN key display "FA00E".
3	Cur_o	S	Press S key, and the display content is shown in the left figure.
4	Cur_o	F	When the F key is pressed, the offset is automatically adjusted. After the adjustment is completed, the left display will be returned after flashing "donE".
5	FA00E	S	Press the S key again to return to the display of "FA00E".

8.4.12 Write inhibit setting of parameters（FA010）

Please refer to the following contents besides the operation steps

Steps	Display after operation	Operation key	Operation
1	FA000	F	Press the F key to select the auxiliary function.
2	FA010	▲ ▼	UP or DOWN key display "FA010".
3	P.0000	S	Press S key, and the display content is shown in the left figure.
4	P.0001	▲ ▼	Press the UP or DOWN key to set to any of the following values. "P.0000": Allowed to Change [Factory Settings] "P.0001": no change
5	FA010	F	Press F to confirm the setting. After the setting is completed, flash "donE" and return to the display on the left. (Note) "Error" is displayed if it is set to a value other than "P.0000" and "P.0001".

8.4.13 Displays the motor model (FA011)

Please refer to the following contents besides the operation steps

Steps	Display after operation	Operation key	Operation
1	FA000	F	Press the F key to select the auxiliary function.

Steps	Display after operation	Operation key	Operation
2	FA011	▲ ▼	UP or DOWN key display "FA011".
3	0.6910	S	Press the S key to display the current motor code. The display content will be shown in the left figure.
4	1.0000	F	Press F key to display the current servo internal parameter 1.
5	2.0000	F	Press F key to display the current servo internal parameter 2.
6	3.0310	F	Press F key to display the current servo internal parameter 3.
7	4.0030	F	Press F key to display the current servo internal parameter 4.
8	5.0016	F	Press F key to display the current servo internal parameter 5.
9	P.0085	F	Press F key, the current motor capacity is 850W,and the unit is 10W.
10	E.0023	F	Press F key, the encoder resolution.
11	FA000	S	Press the S key again to return to the display of "FA011".

8.4.14 Display software version (FA012)

Please refer to the following contents besides the operation steps

Steps	Display after operation	Operation key	Operation
1	FA000	F	Press the F key to select the auxiliary function.
2	FA012	▲ ▼	UP or DOWN key display "FA012".
3	r.0133	S	Press S to display the servo-driven software version, as shown in the left figure.
4	U.2118	F	Press the F key to display the FPGA version.
5	FA012	S	Press the S key again to return to the display of "FA012".

8.4.15 Single parameter adjustment (FA203)

Please refer to the following contents besides the operation steps

Steps	Display after operation	Operation key	Operation
1	FA000	F	Press the F key to select the auxiliary function.
2	FA203	▲ ▼	UP or DOWN key display "FA203".
3	d 0	S	Press S key, and the display content is shown in the left figure.

Steps	Display after operation	Operation key	Operation
4	d 0 ↑ ↓ d 1	▲ ▼	Press the UP or DOWN key to set the adjustment mode. TUNING MODE(Adjust the strength of the setting) 0: Pay attention to the adjustment of stability. 1. Pay attention to responsive adjustment. (Note) TYPE (Rigid type) is fixed as "2".
5	d 0	-	In the non-servo ON state, a servo ON (/S-ON) signal is input from the upper device. In the servo ON state, proceed to step 6.
6	L0040	◀	Press S key to display single parameter gain data as shown on the left.
7	L0050	▲ ▼	When the UP key or DOWN key is operated to change the single parameter gain value, the actual servo gains (Pn100, Pn101, Pn102, Pn401) also change simultaneously. This function judges the response result by the customer, and the adjustment ends when the customer is satisfied.
8	L0050	F	Press F key to save the calculated 4 gains into the parameters. After the adjustment is normally completed, the left display will be returned after flashing "donE". (Note) Please enter Step 9 when the calculated gain is directly ended without saving.
9	FA203	S	Press the S key again to return to the display of "FA203".

8.4.16 EasyFFT（Fn206）

Please refer to the following contents besides the operation steps

Steps	Display after operation	Operation key	Operation
1	FA000	F	Press the F key to select the auxiliary function.
2	FA206	▲ ▼	UP or DOWN key display "FA206".
3	In.015	S	Press S key, the display content is as shown in the left figure, and enter the command amplitude setting mode.
4	In.019	▲ ▼	Press the UP or DOWN key to set the command amplitude. Command amplitude setting range: 1-800 (Note) 1. When setting EasyFFT for the first time, do not change the setting of command amplitude, and start from the initial setting of "15".If the command amplitude is increased, the detection accuracy will be improved, but the vibration and noise generated by the machine will become larger in a short time. Please gradually increase the amplitude value and make changes while observing the situation when changing the command amplitude. 2. The set command amplitude is stored in Pn456.
5	F.	S	Press and hold the S key to enter the operation preparation state.
6	. .run	F	Press F key to enter servo ON state. At this time, if you want to turn OFF the servo, press F key. Return to step 5.
7	E_FFt	▲ ▼	In the servo ON state, press the UP or DOWN key, and the servo motor will rotate forward and reverse several times with a maximum amplitude of 1/4 rotation (within 10mm in the case of linear servo motor). The running time is about 2 seconds. During operation, the display on the left will flash. (Note) 1. Press the F key to return to step 5 when stopping the action. 2. The servo motor moves slightly and makes a sound at the same time. For safety, please do not approach the machine.

Steps	Display after operation	Operation key	Operation
8	F. 893	--	After the detection process is normally completed, the "E_FFt" display stops blinking and shows the detected resonance frequency. If the check-out fails, "F----" is displayed. When setting the check-out result, you must proceed to step 9. If only the resonance frequency is confirmed without setting the detection result, press the S key to return to step 2. ＜Important＞ Even if the detection ends normally, if the running time exceeds 2 seconds, the detection accuracy may be insufficient. If the command amplitude is increased to slightly greater than "15" and then executed again, the detection accuracy may be improved. However, after the command amplitude is increased, the vibration and noise generated by the machine will become larger in a short time. Please gradually increase the amplitude value and make changes while observing the situation when changing the command amplitude.
9	. .run	F	Press F key and it will be automatically set as the best notch filter corresponding to the detected resonant frequency. After the notch filter is normally set, "donE" flashes and returns to the left display. When the 1st notch filter frequency has been set, the 2nd notch filter frequency (Pn40C) will be automatically set in (PN 408.0 = □□□1).Press F again to return to step 5. (Note) 1. When the notch filters of section 1 and section 2 have been set, it is not possible to set the notch filter at (Pn408= n.□1□1). 2. When the notch filter frequency detected by this function is not used, Pn408.0= □0□□0 is set.
10	FA206	S	Press the S key again to return to the display of "FA206".

8.4.17 Load Inertia/Mass Detection (FA208)

Please refer to the following contents besides the operation steps

Steps	Display after operation	Operation key	Operation
1	FA000	F	Press the F key to select the auxiliary function.
2	FA208	▲ ▼	UP or DOWN key display "FA208".
3	L. 3.0	S	Press S key, and the display content is as shown in the left figure. Enter the load inertia/mass pushing distance setting.
4	L. 2.0	▲ ▼	Press the UP or DOWN key to set the moving distance. Unit: coil (rotating motor) mm (linear motor)
5	J. bb	S	Press and hold the S key to enter the operation preparation state.
6	J. run	S	Press S key to enter servo ON state. At this time, if you want to turn OFF the servo, press S key. Return to step 5.
7	donE	▲ ▼	Press the UP or DOWN key in the servo ON state, and the servo motor will rotate forward and reverse several times within the set moving distance (within 10mm in the case of linear servo motor). The running time is about 8 seconds. During operation, the display on the left will flash.
8	J. 108	--	The flicker is stopped and the detected load inertia/mass percentage is displayed after the detection process is normally completed. If the check-out fails, "J.----" is displayed.
9	FA208	S	Press the S key again to return to the display of "FA208".

Chapter 9 Maintenance

9.1 Inspection and component replacement

The inspection of servo drive and component replacement will be described below.

9.1.1 Inspection

Servo drive does not need routine inspection, but the following items need to be inspected at least once a year.

Inspection item	Check interval	Maintenance essentials	Handling in case of failure
Appearance inspection	At least once a year	No garbage, dust, oil stains, etc.	Please wipe with cloth or clean with air gun.
Looseness of screws		Terminal blocks, connector mounting screws, etc. shall not be loosened.	Please tighten it further.

9.1.2 Battery Replacement

When the battery voltage is below about 3V, "encoder battery alarm (A.830)" or "absolute encoder battery abnormality alarm (A.930)" will be displayed.
When this alarm or warning is displayed, the battery needs to be replaced.

Battery Alarm/Warning Settings

Whether to display alarm or warning is set by alarm/warning of battery undervoltage (Pn 008 = n. □□□X).

Parameter		Meaning	Effective time	Category
Pn008	n.□□□0 [Factory setting]	An alarm is displayed when the battery voltage drops (A.830).	Power restart	Setup
	n.□□□1	An alarm is displayed when the battery voltage drops (A.930).		

•When Pn008=n.□□□0 is set
•After switching on the power supply and outputting a servo alarm (ALM) signal for up to 5 seconds, monitor the battery voltage for 4 seconds.
Even if the battery voltage drops below the specified value after 4 seconds, no alarm will be displayed.
•When Pn008 = n. □□□1 is set
After the power supply is turned on and the servo alarm (ALM) signal is output for up to 5 seconds, the battery voltage will always be monitored.

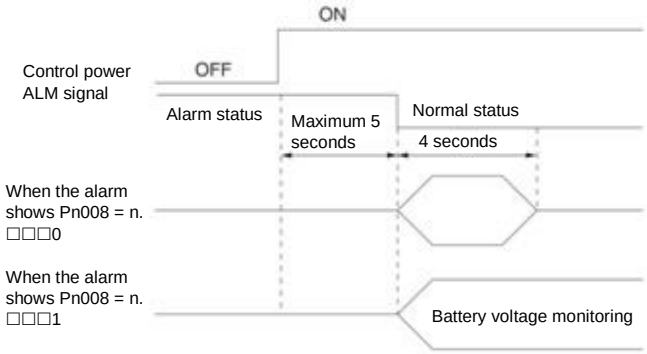

Battery Replacement Steps

◆ When installing the battery on the upper device

1. Only connect to the servo drive control power supply.

2. Remove the used battery and install the new battery.

3. Please turn off the servo drive control power supply to cancel the "A.830 (Encoder Battery Alarm)" display.

4. Connect to the servo drive control power supply again.

5. Confirm that the alarm display disappears and the servo drive can operate normally.

◆ When using encoder cable with battery unit

1. Only connect to the servo drive control power supply.

Important	If the battery is removed after the servo drive control power supply is OFF (including when the encoder cable is removed), the memory data in the absolute value encoder will be lost.

2. Open the outer cover of the battery unit

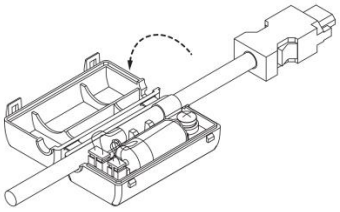

3. Remove the used battery and install the new battery.

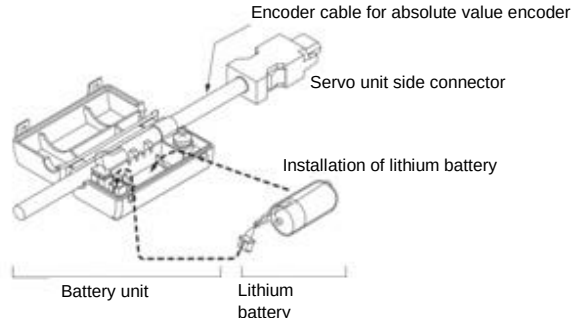

4. Cover the outer cover of the battery unit.

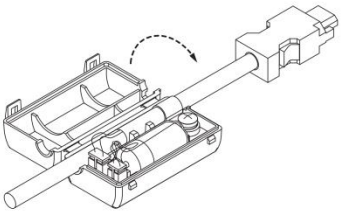

5. Please turn off the servo drive power supply to cancel the "A.830 (Encoder Battery Alarm)" display.
6. Connect to the servo drive power supply again.
7. Confirm that the alarm display disappears and the servo drive can operate normally.

9.2 Alarm display

When the servo drive is abnormal, the LED of the panel display unit displays the Alarm number.

The Alarm number that is occurring is shown below and is displayed in the panel display area.

Example: When "A.20" alarm occurs, it will display:

9.2.1 Warning list

The Alarm name, Alarm content, stop method when alarm occurs and whether alarm reset is possible according to the order of Alarm numbers are listed in the alarm list lists.

Whether the alarm can be reset

Yes: the alarm can be released through alarm reset. However, if the alarm factor still exists, it cannot be released.
No: The alarm cannot be released.

Alarm list

Alarm number	Alarm name	Alarm content	Alarm stop mode	Alarm reset Whether
A.020	Parameter and check exceptions	The data of internal parameters of servo drive is abnormal.	Gr.1	No
A.021	Parameter format exception	The data format of internal parameters of servo drive is abnormal.	Gr.1	No
A.022	System and check exceptions	The data of internal parameters of servo drive is abnormal.	Gr.1	No
A.030	The main circuit detection unit is abnormal.	Various detected data of the main circuit are abnormal.	Gr.1	May
A.040	Parameter setting exception	Out of set range.	Gr.1	No
A.042	Parameter combination exception	The combination of multiple parameters is out of the set range.	Gr.1	No
A.050	Combination error	Outside the combinable motor capacity range.	Gr.1	May
A.051	The product does not support Alarms	Unsupported products are connected.	Gr.1	No
A.0b0	Servo ON command invalid alarm	A servo ON command is sent from the upper device after performing the auxiliary function of energizing the motor.	Gr.1	May
A.100	Overcurrent detection	Power transistor overcurrent or heat sink overheating.	Gr.1	No
A.101	Motor overcurrent detection	A current exceeding the allowable current flows through the motor.	Gr.1	No
A.300	Regeneration anomaly	Regenerative faults.	Gr.1	May
A.320	Regeneration overload	Regeneration overload occurred.	Gr.2	May
A.330	Main circuit power supply wiring error	The setting of AC power input/DC power input is incorrect. The power cord is wired incorrectly.	Gr.1	May
A.400	Overvoltage	The main circuit DC voltage is abnormally high.	Gr.1	May
A.410	Under voltage	The DC voltage of the main circuit is insufficient.	Gr.2	May
A.510	Over speed	The motor speed exceeds the maximum speed.	Gr.1	May
A.520	Vibration alarm	Abnormal vibration of motor speed is detected.	Gr.1	May
A.521	Automatically adjust alarm	Vibration is detected in the automatic adjustment of the adjustment-free function.	Gr.1	May
A.600	Incorrect ESM requires exception protection	A state transition request that cannot be converted from the current state was received.	Gr.1	May
A.601	Undefined ESM requires exception protection	An undefined state transition request was received.	Gr.1	May
A.602	Boot state requires exception protection	Bootstrap state transition request received.	Gr.1	May
A.603	PLL has not completed exception protection	The phase combination of communication and servo is still unable to be completed after synchronization is started for 1s.	Gr.1	May
A.604	PDO watchdog exception protection	When SP or OP, bit10 of ESC register 0200h is not ON within the specified time.	Gr.1	May
A.605	ESC hardware initialization error	ESC hardware initialization error.	Gr.1	May
A.606	PLL exception protection	ESM status is SP or OP, and the communication and servo phases do not match.	Gr.1	May
A.607	Abnormal protection of synchronous signals	SYNC0 or IRQ interrupt processing timed out after synchronization processing was completed.	Gr.1	May
A.610	The same period set abnormal protection	Unsupported synchronization period (SYNC0) is set.	Gr.1	May
A.611	Mailbox Set Exception Protection	SM0/1 of mailbox is set incorrectly.	Gr.1	May
A.614	PDO Watchdog Sets Abnormal Protection	PDO watchdog setting error.	Gr.1	May
A.615	DC set exception protection	DC setting error.	Gr.1	May
A.616	SM event mode setting exception protection	Unsupported SM events are set.	Gr.1	May
A.617	SM2/3 Set Abnormal Protection	SM2/3 is set to an incorrect value.	Gr.1	May
A.620	CAN controller hardware error	CAN transceiver hardware error	Gr.1	May
A.621	CANopen heartbeat timed out	Monitor heartbeat time loss or timeout	Gr.1	May
A.622	CANopen synchronization frame timed out	Synchronization frame lost or timed out	Gr.1	May
A.650	TxPDO allocates exception protection.	The data size of the TxPDO map exceeds 32 bytes.	Gr.1	May
A.651	RxPDO assigns exception protection.	The data size of the RxPDO map exceeds 32 bytes.	Gr.1	May
A.652	Lost link exception protection	After ESM leaves Init state, Port0 or 1 appears lost link state.	Gr.1	May
A.710	Overload (instantaneous maximum load)	It runs for several seconds to tens of seconds with a torque greatly exceeding the rated value.	Gr.2	May
A.720	Overload (continuous maximum load)	Continuous operation is carried out with torque exceeding the rated value.	Gr.1	May
A.730/1	DB overload	Due to the action of DB (dynamic brake), the operating energy exceeds the capacity of DB resistor.	Gr.1	May
A.740	Impulse current limiting resistor overload	The main circuit power on frequency is too high.	Gr.1	May
A.810	Encoder backup alarm	The power supply of the encoder is completely exhausted and the position data is cleared.	Gr.1	No
A.820	Encoder and check alarm	The sum check result of encoder memory is abnormal.	Gr.1	No
A.830	Encoder battery alarm	The voltage of the battery drops below the specified value after switching on the control power supply.	Gr.1	May
A.840	Encoder data alarm	Data inside encoder is abnormal.	Gr.1	No
A.850	Encoder overspeed	When the power supply is ON, the encoder rotates at high speed.	Gr.1	No
A.b6A	MECHATROLINK communication ASIC fault 1	MECHATROLINK Communication ASIC Failure 1 Occurred	Gr.1	No
A.b6b	MECHATROLINK communication ASIC fault 2	MECHATROLINK Communication ASIC Failure 2 Occurred.	Gr.2	No
A.C10	Out of control detection	Servo motor out of control.	Gr.1	May
A.C20	Phase error detection	Error detecting phase.	Gr.1	No
A.C22	Phase information is inconsistent	Phase information is inconsistent.	Gr.1	No
A.C90	Encoder communication failure	There is no communication between encoder and servo drive.	Gr.1	No
A.C91	Abnormal acceleration of encoder communication position data	A failure occurred in the calculation of encoder position data.	Gr.1	No
A.C92	Encoder communication timer exception	The communication timer between encoder and servo drive has failed.	Gr.1	No
A.CA0	Encoder parameter exception	Parameters of encoder are corrupted.	Gr.1	No
A.Cb0	Encoder loopback check exception	The communication content with encoder is incorrect.	Gr.1	No
A.d00	Position deviation is too large	In the servo ON state, the position deviation exceeds the excessive position deviation warning value (Pn520).	Gr.1	May
A.d01	Alarm for excessive position deviation when servo ON	Servo ON is maintained when the position deviation in servo OFF exceeds the set value of the excessive position deviation warning value (Pn526) when servo ON.	Gr.1	May

A.d02	Alarm for excessive positi ON deviation caused by speed limit when servo is on	When the servo is ON in the position deviation accumulation state, the speed limit is executed by the speed limit value (Pn529 or Pn584) when the servo is ON. When a position command is input in this state, the limit is not released and the set value of the warning value (Pn520) for excessive position deviation is exceeded.	Gr.2	May
A.d10	Excessive deviation between motor and load positions	In full closed loop control, the deviation between motor and load position is too large.	Gr.2	May
A.d30	Location data is too large	The position feedback data exceeds 1879048192.	Gr.1	No
A.E02	MECHATROLINK Internal Synchronization Exception 1	MECHATROLINK communication and servo drive synchronization are abnormal.	Gr.1	May
A.E40	MECHATROLINK transmission cycle setting error	The transmission period of MECHATROLINK communication is set incorrectly.	Gr.2	May
A.E42	The address setting of MECHATROLINK station is abnormal	The address of MECHATROLINK Station is set incorrectly.	Gr.2	No
A.E50*	MECHATROLINK synchronization exception	Synchronization exception occurred in MECHATROLINK communication.	Gr.2	May
A.E51	MECHATROLINK synchronization failed	Synchronization failure occurred in MECHATROLINK communication.	Gr.2	May
A.E60*	MECHATROLINK communication failure (receiving error)	MECHATROLINK Communication failure occurs continuously during communication.	Gr.2	May
A.E61	MECHATROLINK transmission cycle is abnormal	Abnormal transmission period occurred in MECHATROLINK communication.	Gr.2	May
A.E63	MECHATROLINK did not receive synchronization frames	Unreceived synchronization frames occur continuously in MECHATROLINK communication.	Gr.2	May
A.Ed1	Command execution timed out	MECHATROLINK command timeout error occurred.	Gr.2	May
A.F10	Power cord phase loss	When the main loop power supply is ON, the low voltage state of one of the three phases lasts for more than 1 second.	Gr.2	May

* This Alarm will not be saved in the Alarm record. Only on the panel display.

9.2.2 Cause of Alarm and Treatment Measures

The following table lists the cause of the alarm and the treatment measures. If the fault cannot be cleared after processing according to the following table, please contact our agency or the nearest branch.

Alarm number: Alarm name	Reason	Confirmation method	The treatment measures
A.020: Parameter and check exceptions The data of internal parameters of servo drive is abnormal.	The supply voltage drops instantaneously.	Measure the supply voltage.	Set the power supply voltage within the specification range, and perform initialization of the parameter setting value.
	Power off when writing parameters	Confirm the time of power failure.	Re-enter parameters after initialization of parameter settings.
	The number of writes to the parameter exceeded the maximum	Confirm whether parameter changes are frequently made from the upper device.	Replace the servo drive. Change the parameter writing method.
	Misoperation occurs due to interference from AC power supply, grounding, static electricity, etc.	Connect to the servo drive power supply again. When the alarm still occurs, it may be disturbed.	Take measures to prevent mutual interference.
	Due to gas, water droplets or cutting oil, etc., the components inside the servo drive have failed.	Confirm the setting environment.	Replace the servo drive.
	Servo drive failure	Connect to the servo drive power supply again. When the alarm still occurs, it may be a fault.	Replace the servo drive.
A.021: Parameter format exception (The data of internal parameters of servo drive is abnormal.)	The software version of the write parameter is updated as compared to the software version of the servo drive where the alarm occurred.	Read the product information and confirm whether the software versions are the same. If the versions are different, an alarm may occur.	Write the parameters of other servo drives with the same software version and model, and then switch on the power supply.
	Servo drive failure	-	Replace the servo drive.
A.022: System parameters and check exceptions (The data of internal parameters of servo drive is abnormal)	The supply voltage drops instantaneously.	Measure the power supply voltage	Replace the servo drive.
	The power supply was turned off in the process of setting the auxiliary function.	Confirm the time of power failure.	Replace the servo drive.
	Servo drive failure	Connect to the servo drive power supply again. When the alarm still occurs, it may be a fault.	Replace the servo drive.
A.030: Main circuit detection unit failure	Servo drive failure	-	Replace the servo drive.
A.040: Parameter setting exception (beyond the set range)	Servo capacity does not match servo motor capacity	Confirm the capacity of servo drive and servo motor Quantity and combination.	Capacity of servo drive and servo motor Match each other.
	Servo drive failure	-	Replace the servo drive.
	Outside the parameter setting range	Confirm the setting range of the changed parameters.	Set the changed parameters to values within the set range.
	The electronic gear ratio setting value is outside the set range	Verify that the electronic gear ratio is 0.001<(Pn20E/Pn210)< 64000.	Set the electronic gear ratio to 0.001< (Pn20E/Pn210) < 64000.
A.042: Parameter combination exception	Since the electronic gear ratio (Pn20E /Pn210) or servo motor is changed, the running speed of the program JOG does not conform to the set range.	Confirm whether the detection condition formula *1 is true.	Reduce the value of the electronic gear ratio (Pn20E/Pn210).
	Since the program JOG moving speed (Pn533) has been changed, the running speed of the program JOG does not conform to the set range.	Confirm whether the detection condition formula *1 is true.	Increase the value of Pn533.
	Due to the change of electronic gear ratio (Pn20E/Pn210) or servo motor, the moving speed of advanced automatic adjustment does not conform to the set range.	Confirm whether the detection condition formula *2 is true.	Reduce the value of the electronic gear ratio (Pn20E/Pn210).
A.050: Combination error (outside the combinable motor capacity range)	Servo drive capacity does not match servo motor capacity	Confirm $\frac{1}{4} \leq \leq \frac{\text{Motor capacity}}{\text{Servo drive capacity}} 4$	Capacity of servo drive and servo motor Match each other.
	Servo drive failure	-	Replace the servo drive.
A.051: The product does not support Alarms	The motor parameter file is not written into the encoder (only when serial conversion unit is not used)	Verify that the motor parameter file is written into the encoder.	Write the motor parameter file into the encoder.

Alarm number: Alarm name	Reason	Confirmation method	The treatment measures
A.0b0: Servo ON command is invalid alarm	After performing the auxiliary function of energizing the motor, servo is sent from the upper device ON(SV_ON) command	-	Connect to the servo drive power supply again. Or perform a software reset.
A.100: Overcurrent detection (overcurrent flows through the power transistor or heat sink to overheat)	The main loop cable is incorrectly wired or has poor contact.	Verify that the wiring is correct.	Modify the wiring.
	Internal short circuit of main loop cable or short circuit to ground occurred.	Verify that there is a short circuit between UVW phases of the cable and between UVW and ground.	The cable may be short-circuited. Replace the cable.
	Short circuit or short circuit to ground occurs inside servo motor	Verify that there is a short circuit between UVW phases of the motor terminals and between UVW and ground.	It is possible that the servo motor is faulty. Replace the servo motor.
	Incorrect wiring or poor contact of regenerative resistor	Verify that the wiring is correct.	Modify the wiring.
	The dynamic brake (emergency stop due to DB and servo drive) is used frequently or DB overload alarm occurs.	Use frequency of DB is confirmed by power consumption of DB resistor. Or use alarm display to confirm whether DB overload alarm has occurred (A.730 or A.731).	Change the type selection, operation method and mechanism of servo drive to reduce the use frequency of DB.
	Regenerative resistance value is too high	Confirm the frequency of use of the regenerative resistor.	Discuss the operating conditions and loads again.
	The regenerative resistance value of servo drive is too small	Confirm the frequency of use of the regenerative resistor.	The regenerative resistance value is changed to a value above the minimum allowable resistance value for servo drive.
	When the servo motor stops or runs at low speed, it bears high load	Verify that the operating conditions are outside the specifications of the servo drive.	Reduce the load borne by the servo motor. Or at a higher operating speed.
	Misoperation due to interference	Improve the interference environment such as wiring and confirm whether there is any effect.	Take measures to prevent interference, such as correctly wiring FG. In addition, the wire size of FG should be the same as that of servo drive main loop.
	Servo drive failure	-	Connect to the servo drive power supply again. When an alarm still occurs, replace the servo drive.
A.101: Motor overcurrent detection (The motor flows through excess capacity Allowable current)	The main loop cable is incorrectly wired or has poor contact	Verify that the wiring is correct	Modify the wiring.
	Internal short circuit of main loop cable or short circuit to ground occurred	Verify that there is a short circuit between UVW phases of the cable and between UVW and ground.	The cable may be short-circuited. Replace the cable.
	Short circuit or short circuit to ground occurs inside servo motor	Verify that there is a short circuit between UVW phases of the motor terminals and between UVW and ground.	It is possible that the servo motor is faulty. Replace the servo motor.
	Short circuit or short circuit to ground occurred inside servo drive	Verify that there is a short circuit between UVW phases and between UVW and ground at the servo motor connection terminal of servo drive.	Replace the servo drive.
	When the servo motor stops or runs at low speed, it bears high load	Verify that the operating conditions are outside the specifications of the servo drive.	Reduce the load borne by the servo motor. Or at a higher operating speed.
	Misoperation due to noise	Improve the noise environment such as wiring and setting, and confirm whether there is any effect.	Take anti-interference measures, such as correctly wiring FG, etc. In addition, the wire size of FG should be the same as that of servo drive main loop.
	Servo drive failure	-	Connect to the servo drive power supply again. When an alarm still occurs, replace the servo drive
A.300: Regenerative faults	The regenerative resistance capacity (Pn600) is set to a value other than "0", and no regenerative resistance is installed	Confirm the connection of external regenerative resistor and the value of Pn600.	Connect external regenerative resistor or set Pn600 (regenerative resistor capacity) to 0 when regenerative resistor is not needed.
	No external regenerative resistance	Confirm external regenerative resistor or regenerative power resistance device connection and Pn600 value.	Set the appropriate value for Pn600 after connecting the external regenerative resistor, or set Pn600 to 0 after connecting the regenerative resistor device.
	The jumper wire of the regenerative resistor connection terminal B2-B3 falls off	Confirm the wiring of the power terminal jumper.	Correct wiring of jumper wires.
	Poor connection, falling off or disconnection of external regenerative resistor	Confirm the wiring of the external regeneration resistor.	Correct wiring of external regenerative resistor.
	Servo drive failure	-	In the state that the main loop power supply is not turned on, the servo drive control power supply is turned on again. When an alarm still occurs, replace the servo drive.
A.320: Regeneration overload	Power supply voltage exceeds specification range	Measure the supply voltage.	Set the power supply voltage within the specification.
	External regenerative resistance value or regenerative resistance capacity is insufficient or in continuous regenerative state	Reconfirm operating conditions and capacity.	Change the regenerative resistance value and regenerative resistance capacity. Adjust the operating conditions again.
	Continuously bears negative load and is in continuous regeneration state	Confirm the load applied to the running servo motor.	Discuss the system including servo, mechanical and operating conditions again.
	The capacity set in Pn600 (regenerative resistance capacity) is smaller than the capacity of external regenerative resistance	Confirm the connection of regenerative resistor and the value of Pn600.	Correct the Pn600 setting.
	The value set in Pn603 (regenerative resistance value) is smaller than the external regenerative resistance value	Confirm the connection of regenerative resistor and the value of Pn603.	Correct the Pn603 setting.
	Excessive external regenerative resistance	Verify that the regenerative resistance value is correct.	Change it to the correct resistance value and capacity
	Servo drive failure	-	Replace the servo drive.
A.330: Main circuit power supply wiring error (detected when main circuit power is turned on)	The power supply voltage inside the servo drive is too high, and the regenerative resistor is disconnected.	Measure the resistance value of the regenerative resistor with a measuring instrument.	Replace the servo drive when using the regenerative resistor built into the servo drive. When using an external regenerative resistor, replace the regenerative resistor.
	When setting AC power input, DC power is input	Verify that the power supply is DC.	Make the set value of the power supply consistent with the power supply used.
	When setting DC power input, AC power is input	Verify that the power supply is AC.	Make the set value of the power supply consistent with the power supply used.
	The regenerative resistance capacity (Pn600) is set to a value other than "0" and no regenerative resistance is installed	Confirm the connection of external regenerative resistor and the value of Pn600.	Connect an external regenerative resistor or set Pn600 to 0 when no external regenerative resistor is required.
	Servo drive failure	-	Replace the servo drive.

Alarm number: Alarm name	Reason	Confirmation method	The treatment measures
A.400：Overvoltage (Overvoltage Detected by Main Circuit Power Supply in Servo Drive)	Power supply voltage exceeds specification range	Measure the supply voltage.	Adjust the AC/DC power supply voltage to the product specifications.
	The power supply is in an unstable state or is affected by lightning strike	Measure the supply voltage.	Improve the power supply condition and switch on the servo drive power again after installing surge suppressor. When an alarm still occurs, replace the servo drive.
	When the AC power supply voltage exceeds the specification range, acceleration and deceleration are carried out	Confirm the power supply voltage, speed and torque in operation.	Adjust the AC power supply voltage to the product specifications.
	External regenerative resistance value is larger than operating conditions	Confirm the operating conditions and regenerative resistance value.	Confirm that the rotational inertia ratio or mass ratio is within the allowable range.
	Operate in a state where the allowable moment of inertia ratio or mass ratio is above the allowable moment of inertia ratio or mass ratio to confirm that the moment of inertia ratio or mass ratio is within the tolerance	Confirm that the rotational inertia ratio or mass ratio is within the allowable range.	Extend deceleration time or reduce load.
	Servo drive failure	-	In the state that the main loop power supply is not turned on, the servo drive control power supply is turned on again. When an alarm still occurs, replace the servo drive.
A.410：Under voltage (The power supply part of the main loop inside the servo drive detects the undervoltage)	Supply voltage below specification	Measure the power supply voltage.	Adjust the power supply voltage to the normal range
	Power supply voltage drops during operation	Measure the power supply voltage.	Increase power supply capacity.
	Instantaneous power failure occurred	Measure the power supply voltage.	If the instantaneous stop holding time (Pn509) is changed, it is set to a smaller value.
	Servo drive fuse blown	-	Replace the servo drive
	Servo drive failure	-	Replace the servo drive.
A.510：Over speed (Motor speed is above the highest speed)	U, V, W phase sequence error of motor wiring	Confirm the connection of servo motor.	Confirm whether there is any problem with the motor wiring.
	The command input value exceeds the overspeed value	Confirm the input command.	Lower the command value. Or adjust the gain.
	The motor speed exceeds the maximum speed	Confirm the waveform of motor speed.	Reduce the speed command input gain and adjust the servo gain. Or adjust operating conditions.
	Servo drive failure	-	Replace the servo drive.
A.520：Vibration alarm	Abnormal vibration of motor speed is detected	Confirm the abnormal sound of the motor and the speed and torque waveforms during operation.	Reduce motor speed. Or reduce the speed loop gain (Pn100).
	The value of the moment of inertia ratio (Pn103) is larger than the actual value or varies greatly	Confirm the moment of inertia ratio or mass ratio.	Correctly set the moment of inertia ratio (Pn103).
	Vibration detection value (Pn312) is inappropriate	Verify that the vibration detection value (Pn312) is appropriate.	Set the vibration detection value appropriately (Pn312).
A.521：Automatically adjust alarm (Custom adjustments, EasyFFT, no adjustment Vibration detected in function)	The motor vibrates greatly when using the adjustment-free function	Confirm the waveform of motor speed.	Reduce the load below the allowable moment of inertia ratio, or increase the load value set by the adjustment-free value to reduce the rigidity value.
	The motor vibrates greatly when custom adjustment and EasyFFT are performed.	Confirm the waveform of motor speed.	The processing method described in the operation steps for implementing each function.
A.710：Overload (instantaneous maximum load) A.720：Overload (continuous maximum load)	Motor wiring, encoder wiring or poor connection	Confirm wiring.	Confirm whether there is any problem with motor wiring and encoder wiring.
	The operation of the motor exceeds the overload protection characteristic	Confirm the overload characteristics and operation commands of the motor.	Discuss load conditions and operating conditions again. Or reconsider the motor capacity.
	The motor is not driven due to mechanical factors, resulting in excessive load during operation	Confirm the operation command and motor speed.	Improve mechanical factors.
	Servo drive failure	-	Replace the servo drive.
A.730：A.731：DB overload (Excessive power consumption of dynamic brake detected)	The motor is being driven by external force	Confirm operation status.	Do not drive the motor by external force.
	The rotating or operating energy when DB stops exceeds the capacity of DB resistor	The usage frequency of DB is confirmed by the power consumption of DB resistor.	Try the following measures. • Reduce the command speed of servo motor. • Reduce the rotational inertia ratio or mass ratio. • Reduce the number of DB stops.
	Servo drive failure	-	Replace the servo drive.
A.740: Impulse Current Limiting Resistance Overload (The main circuit power on frequency is too high)	The allowable number of inrush current limiting resistors when the main loop power supply is ON/OFF is exceeded	-	Lower the ON/OFF frequency of the main loop power supply.
	Servo drive failure	-	Replace the servo drive.
A.810：Encoder backup alarm (only detected when absolute value encoder is connected (Detected on encoder side	Turn on the power supply of absolute value encoder for the first time	Confirm whether the power is switched on for the first time.	Setting operation of encoder is carried out
	The encoder cable was removed and then connected	Confirm whether the power is switched on for the first time.	Confirm the connection of the encoder and set the encoder.
	The servo drive control power supply (+5V) and battery power supply have both failed	Verify that the encoder connector battery and connector status are correct.	After power supply to the encoder is restored (battery replacement, etc.), the encoder is set up.
	Absolute value coder fault	-	When the alarm cannot be released even if the setting operation is performed again, replace the servo motor.
	Servo drive failure	-	Replace the servo drive.
A.820：Encoder and check alarm (Detected on encoder side）	Encoder failure	-	Reset encoder. When it still occurs frequently, it is possible that the servo motor fails. Replace the servo motor.
	Servo drive failure	-	Replace the servo drive.
A.830：Encoder battery alarm (The absolute value encoder battery voltage is below the specified value)	The battery is not well connected and not connected	Confirm battery connection.	Connect the battery correctly.
	The battery voltage is lower than the specified value (2.7 V)	Measure the battery voltage.	Replace the battery.
	Servo drive failure	-	Replace the servo drive.

Alarm number: Alarm name	Reason	Confirmation method	The treatment measures
A.840：Encoder data alarm (Detected on encoder side）	Encoder malfunction	-	Connect to the servo drive power supply again. When an alarm still occurs, replace the servo motor or encoder.
	Incorrect operation of encoder due to interference, etc	-	Correct wiring of encoder periphery (separating encoder cable from servo motor main loop cable, grounding treatment, etc.).
A.850：Encoder overspeed (detected when the control power is turned on) (Detected on encoder side）	When the control power supply is turned on, the motor rotates at a speed of 200 min^{-1} or more (when rotating the servo motor)	Confirm the motor speed when the power supply is turned on through the motor rotation speed.	Adjust the rotation speed of servo motor to less than 200min^{-1}, and then switch on the control power supply.
	Encoder failure	-	Connect to the servo drive power supply again. When an alarm still occurs, replace the servo motor or encoder.
	Servo drive failure	-	Connect to the servo drive power supply again. When an alarm still occurs, replace the servo drive.
A.b6A：MECHATROLINK Communication ASIC fault 1	Servo drive MECHATROLINK communication failure	-	Connect to the servo drive power supply again. When an alarm still occurs, replace the servo drive.
A.b6b：MECHATROLINK Communication ASIC fault 2	Due to interference, MECHATROLINK communication caused misoperation.	-	Take the following anti-interference measures. Correct the connection of communication cable or FG. Install ferrite cores on communication cables.
	Servo drive MECHATROLINK communication failure	-	Connect to the servo drive power supply again. When an alarm still occurs, replace the servo drive.
A.C10：Out of control detection (detected when servo is ON)	U, V, W phase sequence error of motor wiring	Confirm the wiring of motor.	Confirm whether there is any problem with the motor wiring.
	Encoder failure	-	Whether there is no problem with the wiring of the motor, if the alarm still occurs after the power is switched on again, it may be the fault of the servo motor or encoder. Replace the servo motor or encoder.
	Servo drive failure	-	Connect to the servo drive power supply again. When an alarm still occurs, replace the servo drive.
A.C20：Phase error detection	Linear encoder signal level low	Confirm the voltage of the linear encoder signal	Installation of reading head of fine grating ruler. Or replace the linear encoder.
	The positive counting direction of the linear encoder does not match the positive direction of the motor rotor	Confirm the setting of Pn080=n.□□X□ (motor phase sequence selection) and the installation direction of linear encoder and motor rotor.	Change the setting of Pn080=n.□□X□.Reinstall the linear encoder and motor rotor.
	The magnetic pole sensor signal is disturbed	-	Correct FG wiring. Implement anti-interference countermeasures for magnetic pole sensor wiring.
A.C21：Magnetic pole sensor failure	Linear encoder grating scale pitch (Pn282) setting error	Confirm linear encoder grating pitch (Pn282).	Confirm the specifications of linear encoder and set the value correctly.
	The magnetic pole sensor is exposed outside the motor stator	Confirm magnetic pole sensor.	Reinstall the motor rotor or stator.
	Incorrect wiring of magnetic pole sensor	Confirm the wiring of magnetic pole sensor.	Correct the wiring of magnetic pole sensor.
	Magnetic pole sensor failure	-	Replace the magnetic pole sensor.
A.C22：Phase information is inconsistent	Servo unit and linear encoder Phase information is different	-	Perform magnetic pole detection.
A.C50：Magnetic pole detection failed	Parameter setting incorrect	Confirm the specifications of the linear encoder and the status of the feedback signal.	The settings of linear encoder grating pitch (Pn282) and motor phase sequence selection (Pn080 = n.□□X□) may not be consistent with the state of the device.Set parameters correctly.
	The grating scale signal is disturbed	Confirm that the serial conversion unit, FG of servo motor and FG of servo unit are connected, and FG of servo unit is connected with FG of power supply. In addition, it is confirmed that the cable of the linear encoder is indeed shielded. Confirm whether the detection command is repeatedly output in the same direction for many times.	Take appropriate anti-interference measures for cables used for linear encoders.
	The motor rotor is subjected to external force	-	Even if the detection command is 0 and the speed feedback is not 0 when external force such as cable tension is applied to the motor rotor, and it cannot be detected smoothly. Reduce the external force so that the speed feedback is 0. Increase the magnetic pole detection speed loop gain (Pn481) when the external force cannot be reduced.
	Linear encoders have low resolution	Confirm whether the pitch of linear encoder grating ruler is within 100 m.	When the pitch of linear encoder grating scale is more than 100m, the servo unit cannot detect the correct speed feedback. Use high precision linear encoder grating scale pitch (within 40m is recommended). Or increase the magnetic pole detection command speed (Pn485). However, the motor operation range when magnetic poles are detected becomes larger.
A.C51：Over-travel detection when magnetic pole is detected	Over-travel signal is detected when magnetic pole is detected	Confirm the overtravel position.	Connect the over-travel signal. Magnetic pole detection is carried out at the position where the over-travel signal cannot be detected.
A.C52：Magnetic pole detection is not complete	Servo ON in the following states • When magnetic pole detection is not completed • When/p-det is not entered	-	Input /P-DET signal.
A.C53：The magnetic pole detection is beyond the active range	The detection moving distance exceeds the magnetic pole detection moving range.（Pn48E）	-	Expand the range of magnetic pole detection activities (Pn48E). Or increase the pole detection speed loop gain (Pn481).
A.C54：Magnetic pole detection failed 2	Under external force	-	Increase the value of the magnetic pole detection confirmation thrust command (Pn495). Increase the allowable range of magnetic pole detection error (Pn498). However, once the error tolerance range is expanded, the motor temperature will rise.

Alarm number: Alarm name	Reason	Confirmation method	The treatment measures
A.C80: Encoder clearance exception (Abnormal setting of upper limit value of rotation number)	Encoder failure	-	Reconnect the power to the servo unit. It may be a servo motor or a linear encoder fault when an alarm still occurs. Replace the servo motor or linear encoder.
	Servo unit failure	-	Reconnect the power to the servo unit. When an alarm still occurs, it is possible that the servo unit has failed. Replace the servo unit
A.C90: Encoder communication failure	Poor contact or wrong wiring of encoder connector	Verify the status of the encoder connector.	Insert the encoder connector again and confirm the encoder wiring.
	Encoder cable is broken, short-circuited, or cable exceeding specified impedance is used	Confirm the status of the encoder cable.	Use encoder cable of specified specification.
	Corrosion caused by temperature, humidity and gas; Short circuit caused by water drops and cutting oil; Poor connector contact caused by vibration	Confirm the use environment.	Improve the use environment and replace cables. Even if this still cannot improve, replace the servo drive.
	Misoperation due to mutual interference	-	Correct wiring of encoder periphery (separating encoder cable from servo motor main loop cable, grounding treatment, etc.).
	Servo drive failure	-	When connecting the servo motor to other servo drives and turning on the control power supply, if no alarm occurs, replace the servo drive.
A.C91: Abnormal acceleration of encoder communication position data	Encoder cables are embedded, cladding is damaged, and signal lines are disturbed	Confirm the status of encoder cables and connectors.	Confirm whether there is any problem in the laying of encoder cable.
	Verify that the encoder cable is tied together or too close to the high current wire	Confirm the setting status of encoder cable.	Lay the encoder cable at a position not subject to surge voltage.
	The potential of FG changes due to the influence of motor-side equipment (welding machine, etc.)	Confirm the setting status of encoder cable.	Ground the machine and shunt FG.
A.C92: Encoder communication timer exception	The encoder's signal line is disturbed	-	Implement anti-interference countermeasures for encoder wiring.
	The encoder is subject to excessive vibration impact	Confirm usage.	Reduce mechanical vibration. Install servo motor or encoder correctly.
	Encoder failure	-	Connect to the servo drive power supply again. When an alarm still occurs, replace the servo motor or encoder.
	Servo drive failure	-	
A.CA0: Encoder parameter exception	Encoder failure	-	Connect to the servo drive power supply again. When an alarm still occurs, replace the servo motor or encoder.
A.Cb0: Encoder Echo check exception	Incorrect wiring and poor contact of encoder	-	Confirm whether there is any problem with encoder wiring.
	Encoder cables have different specifications and are subject to interference	-	Change the cable specification to double stranded shielded wire or double stranded unified shielded wire with core wire of more than 0.12 mm^2 and tinned soft copper stranded wire.
	Encoder cable length is too long and is disturbed.	-	The longest connection distance of encoder cable is 50m.
	The potential of FG changes due to the influence of motor-side equipment (welding machine, etc.)	Confirm the status of encoder cables and connectors.	Ground the machine to prevent shunting to encoder side FG.
	The encoder is subject to excessive vibration impact	Confirm usage.	Reduce mechanical vibration. Install servo motor or linear encoder correctly.
	Encoder failure	-	Connect to the servo drive power supply again. When an alarm still occurs, replace the servo motor or encoder.
	Servo drive failure	-	Connect to the servo drive power supply again. When an alarm still occurs, replace the servo drive.
A.d00: Position deviation is too large (In the servo ON state, the position deviation exceeds position deviation is too large warning value (Pn520))	U, V, W wiring of servo motor is incorrect	Confirm the connection of servo motor main loop cable.	Confirm whether the motor cable or encoder cable has poor contact and other problems.
	Position command speed too fast	Try to reduce the speed of the position command before running.	Lower the position command speed or command acceleration, or adjust the electronic gear ratio.
	Position command acceleration is too large	Try to reduce the commanded acceleration before running.	The acceleration of the position command is reduced by the MECHATROLINK command. Or select the position command filter (ACCFIL) through the MECHATROLINK command to smooth the acceleration of the position command.
	Relative to the operating conditions, the warning value (Pn520) for excessive position deviation is low	Verify that the warning value (Pn520) for excessive position deviation is appropriate.	Correctly set the value of parameter Pn520
	Servo drive failure	-	Connect to the servo drive power supply again. When an alarm still occurs, replace the servo drive
A.d01: When the servo ON Warning of excessive position deviation	Position deviation in servo OFF exceeds Pn526 (warning value of excessive position deviation when servo ON) is set to keep servo ON	Confirm the position deviation when servo OFF.	When the servo ON is correctly set, the warning value of position deviation is too large (Pn526).
A.d02: When the servo ON Position caused by speed limit excessive deviation alarm	When the servo is ON in the position deviation accumulation state, the speed limit is executed by the speed limit value (Pn529) when the servo is ON. The position command input in this state exceeds the set value of the warning value (Pn520) for excessive position deviation	-	Set the correct position for excessive deviation warning value (Pn520). Or set the speed limit value (Pn529) at servo ON to the correct value.
A.d10: Excessive deviation between motor and load positions	The rotation direction of the motor is opposite to the installation direction of the external encoder	Confirm the rotation direction of the motor and the installation direction of the external encoder.	Turn the installation direction of the external encoder in the opposite direction, or set the rotation direction of "external encoder usage method (Pn002 = n.X□□□)" to the opposite direction.
	Load position of workpiece table and installation failure of external encoder joint	Confirm the external encoder joint.	The mechanical bonding is carried out again

Alarm number: Alarm name	Reason	Confirmation method	The treatment measures
A.d30 Location data is too large	Location data exceeds ±1879048192	Confirm the input command pulse counter.	Revise operating specifications.
A.E02: MECHATROLINK Internal synchronization exception 1	The transmission period of MECHATROLINK has changed	-	The reason for the transmission cycle variation of the upper device is eliminated.
	Servo drive failure	-	Connect to the servo drive power supply again. When an alarm still occurs, replace the servo drive.
A.E40: MECHATROLINK Transmission cycle setting failure	MECHATROLINK transmission cycle setting is out of specification range	Confirm the transmission cycle setting of MECHATROLINK.	Set the transmission period of MECHATROLINK to the correct value.
A.E42: MECHATROLINK Station address setting exception	The station address is outside the set range	Confirm whether the rotary switches (S1, S2) are within the range of 03 ~ EF.	Confirm the station address setting of the upper device and set the rotary switches (S1, S2) to the correct values (03-EF).
	The same address exists in the communication network	Confirm whether the same address exists in the communication network.	Confirm the station address setting of the upper device and set the rotary switches (S1, S2) to the correct values (03-EF).
A.E50*3: MECHATROLINK Synchronization exception	WDT data update of upper device is abnormal	Confirm WDT data update of the upper device.	Correctly update WDT data of upper device.
	Servo drive failure	-	Connect to the servo drive power supply again. When an alarm still occurs, replace the servo drive.
A.E51: MECHATROLINK Synchronization failed	When synchronous communication starts, the WDT data of the upper device is updated abnormally and synchronous communication cannot be started	Confirm WDT data update of the upper device.	Correctly update WDT data of upper device.
	Servo drive failure	-	Connect to the servo drive power supply again. When an alarm still occurs, replace the servo drive.
A.E60*3: MECHATROLINK Abnormal of communication (Receiving error)	MECHATROLINK wiring is incorrect	Confirm the wiring of MECHATROLINK.	Connect MECHATROLINK communication cable properly. Connect the termination resistor correctly.
	MECHATROLINK received data incorrectly due to mutual interference.	-	Take measures to prevent mutual interference. (Adjust the wiring of MECHATROLINK communication cable or FG. E.g. adding ferrite cores to the MECHATROLINK communication cable, etc.)
	Servo drive failure	-	Connect to the servo drive power supply again. When an alarm still occurs, replace the servo drive.
A.E61: MECHATROLINK Abnormal transmission period (Synchronization Interval Abnormal)	The transmission period of MECHATROLINK has changed	Confirm the transmission cycle setting of MECHATROLINK.	The reason for the transmission cycle variation of the upper device is eliminated.
	Servo drive failure	-	Connect to the servo drive power supply again. When an alarm still occurs, replace the servo drive.
A.E63: MECHATROLINK Synchronization frame not received	MECHATROLINK wiring is incorrect	Confirm the wiring of MECHATROLINK.	Connect MECHATROLINK communication cable properly.
	MECHATROLINK received data incorrectly due to mutual interference	-	Take measures to prevent mutual interference. (Adjust the wiring of MECHATROLINK communication cable or FG. E.g. adding ferrite cores to the MECHATROLINK communication cable, etc.)
	Servo drive failure	-	Connect to the servo drive power supply again. When an alarm still occurs, replace the servo drive.
A.Ed1: Command execution timed out	MECHATROLINK command timeout error occurred.	Confirm the monitor status when executing the command.	Set to not execute SV_ON and SENS_ON commands during motor operation.
A.F10: Power cord phase loss (When the main circuit power supply is ON, the low voltage state of one of R, S and T phases lasts for more than 1 second)	Poor connection of three-phase wires	Confirm the wiring of power supply.	Confirm whether there is any problem with the power supply wiring.
	Three-phase power supply imbalance	Measure the voltage of each phase of the three-phase power supply.	Correct the imbalance of power supply (change phase).
	Single-phase AC power input (Pn00B = n.□1□□) is not set and single-phase power is input	Confirm power supply and parameter settings.	Set correct power input and parameters.
	Servo drive failure	-	Connect to the servo drive power supply again. When an alarm still occurs, replace the servo drive.
	Poor connection or poor connection of motor wiring	Confirm wiring.	Confirm whether there is any problem with the motor wiring.
	Servo drive failure	-	Connect to the servo drive power supply again. When an alarm still occurs, it is possible that the servo unit has failed. Replace the servo drive.

*1. Detection condition formula

When either of the following two conditional expressions holds, an alarm will be detected.

- Pn533 [min^{-1}] × $\frac{\text{Encoder resolution}}{6\times10^5}$ ≤ $\frac{\text{Pn20E}}{\text{Pn210}}$
- Maximum speed of motor [min^{-1}] × $\frac{\text{Encoder resolution}}{\text{around } 3.66\times10^{12}}$ ≤ $\frac{\text{Pn20E}}{\text{Pn210}}$

*2. Detection condition formula

When either of the following two conditional expressions holds, an alarm will be detected.

- Rated speed of motor [min^{-1}] × $\frac{1}{3}$ × $\frac{\text{Encoder resolution}}{6\times10^5}$ ≤ $\frac{\text{Pn20E}}{\text{Pn210}}$
- Maximum speed of motor [min^{-1}] × $\frac{\text{Encoder resolution}}{\text{around } 3.66\times10^{12}}$ ≥ $\frac{\text{Pn20E}}{\text{Pn210}}$

9.2.3 Alarm reset

When the servo alarm output (ALM) signal occurs, reset it by any of the following methods after eliminating the alarm cause.

> Important
> Before resetting the servo alarm, be sure to eliminate the alarm reason.
> If the alarm reset is executed without excluding the alarm reason, equipment damage or fire may occur when the alarm reset is kept running.

- Reset Based on Alarm, Warning Clear (ALM_CLR) command
- Based on the panel operation key, press S key to reset

9.2.4 Display of alarm records

Servo drive has tracing display function, which can trace up to 10 alarm records that have occurred.

9.2.5 Deletion of Alarm records

The function of deleting servo-driven alarm records.

The alarm record will not be deleted even if the alarm reset is performed or the power supply of the servo drive main circuit is cut off, so the following operations must be performed.

The following operations can be performed

Operating tool	Distribution
Panel operator	Fn006
iWatch+ debugging software	[Alarm Display]---[Historical Alarm]---[Clear]

9.3 When warning is displayed

When the servo drive is warned, the LED of the panel display unit displays the Alarm number. The warning will be displayed before an exception occurs.

The following is a list of warnings and their causes and treatment measures.

9.3.1 Warning list

The Alarm names and contents are listed below in the order of the Alarm numbers.

Alarm number	Alarm name	Alarm content	Reset
A.900	Position deviation is too large	The accumulated position deviation exceeds the proportion set by ($\frac{Pn520 \times Pn51E}{100}$).	Need
A.901	Excessive position deviation when servo ON	The accumulated position deviation during servo ON exceeds the proportion set by ($\frac{Pn526 \times Pn528}{100}$).	Need
A.910	Overload	Warning display immediately before overload (A.710/720) alarm is reached. If the operation continues, an alarm may occur.	Need
A.911	Vibration	Abnormal vibration in motor operation is detected. Same as the detection value of A.520, the vibration detection switch (Pn310) is used to set the alarm or warning.	Need
A.920	Regeneration overload	Warning display immediately before reaching regeneration overload (A.320) alarm. If the operation continues, an alarm may occur.	Need
A.921	DB overload	Warning display immediately before DB overload (A .731) alarm is reached. If the operation continues, an alarm may occur.	Need
A.930	Battery failure of absolute encoder	Is a warning display of low battery voltage of absolute encoder.	Need
A.94A	Data Setting Warning 1 (Parameter Number)	The parameter number of data setting warning 1 (parameter number) command is incorrect.	Automatic reset *
A.94B	Data setting warning 2 (out of data range)	Out-of-range values are set in the command data.	Automatic reset *
A.94C	Data setting warning 3 (calculation error)	A calculation error was detected.	Automatic reset *
A.94D	Data Setting Warning 4 (Parameter Size)	Data size mismatch detected.	Automatic reset *
A.94E	Data Setting Warning 5 (Latch Exception)	Latch mode exception detected.	need

Alarm number	Alarm name	Alarm content	Reset
A.95A	Command Warning 1 (Out of Command Conditions)	When the command condition is not sufficient, the command is executed.	Automatic reset *
A.95B	Command Warning 2 (Command Not Supported)	An unsupported command was instructed.	Automatic reset *
A.95D	Command Warning 4 (Interference of Command)	Interference of commands (mainly refers to interference of latch commands).	Automatic reset *
A.95E	Command Warning 5 (Subcommands Not Available)	Interference between sub-command and main command.	Automatic reset *
A.95F	Command Warning 6 (No Command Defined)	An undefined command was instructed.	Automatic reset *
A.960	MECHATROLINK communication alarm	MECHATROLINK Communication failure during communication.	need
A.971	Under voltage	Warning display immediately before the undervoltage (A.410) alarm is reached. If the operation continues, an alarm may occur.	need
A.97A	Command Warning 7 (Layer Exception)	Ccommand that cannot be executed is specified in the current layer.	Automatic reset *
A.97b	Data Clamping Out of Data Range	To set the minimum and maximum values of the command data outside the range fixed.	Automatic reset *
A.9A0	Overtravel	Overtravel detected in servo ON.	need

* When using MECHATROLINK-III standard servo profile command, it will automatically reset when receiving normal command. When using the MECHATROLINK-II compatible configuration file command, reset the warning according to the alarm and warning clear command (ALM_CLR).

(Note) 1. If it is not set to "output alarm code and warning code (Pn001 = n.1□□□)", no warning code will be output.

2. Whether the warning detection is set by Pn008 = n.□X□□ (warning detection selection).
However, the warnings shown in the following table are divided into two types: not affected by the Pn008 = n.□X□□ setting; Pn008 = n.□X□□ requires other parameters to be set.

Warning	Warning Check Select Parameters to Set
A.911	Pn310=n.□□□X (vibration detection selection)
A.923	- (has no effect on the setting of Pn008= n.□X□□)
A.930	Pn008=n.□□□X (alarm/warning selection for battery undervoltage)
A.942	Pn423=n.□□X□ (speed pulsation compensation information inconsistency warning detection selection)
A.94A～A.960 A.97A～A.97b	Pn800=n.□□X□ (warning check mask)
A.971	Pn008= n.□□X□ (function selection under voltage) (has no effect on the setting of Pn008= n. □X□□)
A.9A0	Pn00D= n.X□□□ (speed ratio warning detection selection) (has no effect on the setting of Pn008= n.□X□□)
A.9b0	Pn00F= n.□□□X (preventive maintenance warning selection)

9.3.2 Reasons for Warning and Countermeasures

The following table lists the cause of the alarm and the treatment measures. If the fault cannot be cleared after processing according to the following table, please contact our company.

Alarm number: Alarm name	Reason	Confirmation method	The treatment measures
A.900: Position deviation is too large	U, V, W wiring of servo motor is incorrect	Confirm the connection of servo motor main loop cable.	Confirm whether the motor cable or encoder cable has poor contact and other problems.
	The gain of servo drive is low	Verify that the servo drive gain is too low.	The servo gain is improved through automatic adjustment (no-bit command) function, etc.
	Position command acceleration is too large	Try to reduce the commanded acceleration before running.	Lower the position command acceleration. Or, select the position command filter to smooth the acceleration of the position command.
	Relative to the operating conditions, the alarm (Pn520) for excessive position deviation is low	Confirm that the position deviation is too large for warning value (Pn520) is appropriate.	Correctly set the value of parameter Pn520
	Servo drive failure	-	Connect to the servo drive power supply again. When an alarm still occurs, replace the servo drive.
A.901: Excessive position deviation when servo ON	The accumulated position deviation during servo ON exceeds the proportion set by ($\frac{Pn526 \times Pn528}{100}$)	-	When the servo ON is correctly set, the warning value of position deviation is too large (Pn528).
A.910: Overload (Warning before becoming overload alarm (A.710 or A.720))	Motor wiring, encoder wiring or poor connection	Confirm wiring.	Confirm whether there is any problem with motor wiring and encoder wiring.
	The operation of the motor exceeds the overload protection characteristic	Confirm the overload characteristics and operation commands of the motor.	Discuss load conditions and operating conditions again. Or reconsider the motor capacity.
	The motor is not driven due to mechanical factors, resulting in excessive load during operation	Confirm the operation command and motor speed.	Improve mechanical factors.
	Verify that the overload warning value (Pn52B) is appropriate	Verify that the overload warning value (Pn52B) is appropriate.	Verify that the overload warning value (Pn52B) is appropriate.
	Servo drive failure	-	Replace the servo drive.
A.911: Vibration	Abnormal vibration in motor operation is detected	Confirm the abnormal sound of the motor and the speed and torque waveforms during operation.	Reduce motor speed. Or reduce servo gain through custom adjustment, etc.
	The value of the moment of inertia ratio (Pn103) is larger than the actual value or varies greatly	Confirm the moment of inertia ratio or mass ratio.	Correctly set the moment of inertia ratio (Pn103).
	Vibration detection value (Pn312 or Pn384) is inappropriate	Verify that the vibration detection value (Pn312 or Pn384) is appropriate.	Set the vibration detection value (Pn312 or Pn384) appropriately.
A.920: Regeneration overload (Warning before becoming regeneration overload (A.320))	Power supply voltage exceeds specification range	Measure the supply voltage.	Set the power supply voltage within the specification
	External regenerative resistance value, servo drive capacity or regenerative resistance capacity is insufficient, or in a continuous regenerative state	Reconfirm operating conditions and capacity.	Change the regenerative resistance value, regenerative resistance capacity or servo drive capacity. Adjust the operating conditions again.
	Continuously bears negative load and is in continuous regeneration state	Confirm the load applied to the running servo motor.	Discuss the system including servo, mechanical and operating conditions again.
A.921: DB overload (Warning before DB Overload (A.731))	The motor is being driven by external force	Confirm operation status.	Do not drive the motor by external force.
	The rotating or operating energy when DB stops exceeds the capacity of DB resistor	Confirm the usage frequency of DB by DB resistance power consumption.	Try the following measures. Reduce the command speed of servo motor. Reduce the moment of inertia or mass. Reduce the number of DB stops.
	Servo drive failure	-	Replace the servo drive.
A.930: Battery failure of absolute encoder	The battery is not well connected and not connected	Confirm battery connection.	Connect the battery correctly.
	The battery voltage is lower than the preset value (2.7 V)	Measure the battery voltage.	Replace the battery.
	Servo drive failure	-	Replace the servo drive.
A.960: MECHATROLINK Communication warning	The communication cable of MECHATROLINK is incorrectly wired	Confirm the connection status.	Connect MECHATROLINK communication cable properly.
	MECHATROLINK received data incorrectly due to mutual interference	Confirm the setting environment.	Take the following anti-interference measures. • Adjust the wiring of communication cable and FG to avoid interference. • Install ferrite cores on communication cables.
	Servo drive failure	-	Replace the servo drive.
A.971: Under voltage	AC power supply voltage driven by servo is too low	Measure the supply voltage.	Adjust the power supply voltage to the normal range
	Power supply voltage drops during operation	Measure the supply voltage.	Increase power supply capacity
	Instantaneous power failure occurred	Measure the supply voltage.	If the instantaneous stop holding time (Pn509) is changed, it is set to a smaller value.
	Servo drive fuse blown	-	Replace the servo drive and connect the reactor before using the servo drive.
	Servo drive failure	-	Replace the servo drive.
A.97A: Command Warning 7	An unexecuted command was received in the current layer	-	The command will be sent after the sending condition is met.
A.97b: Out of Data Range	Out-of-range values are set in the command data		Set the value within the set range in the command data.
A.9A0: Overtravel (Check out over-travel status)	Overtravel detected in servo ON	The status of the over-travel signal is confirmed through input signal monitoring.	If the over-travel signal cannot be confirmed through input signal monitoring, the over-travel may be detected instantaneously. Carry out the following projects. • Do not execute commands from the upper device to the over-travel field. • Confirm the wiring of over-travel signal.

9.4 Monitoring of communication data when alarms and warnings occur

The command data when an alarm or warning (e.g. data setting warning (A.94) or command warning (A.95)) occurs can be monitored through the following parameters. The following is the data when an alarm or warning occurs under normal conditions.

CMD data in case of alarm or warning: Pn890～Pn8A6

RSP data in case of alarm or warning: Pn8A8～Pn8BE

Command byte order	Location where command data is saved in case of alarm or warning	
	CMD	RSP
0	Pn890 = n. □□□□□□XX	Pn8A8 = n. □□□□□□XX
1	Pn890 = n. □□□□XX□□	Pn8A8 = n. □□□□XX□□
2	Pn890 = n. □□XX□□□□	Pn8A8 = n. □□XX□□□□
3	Pn890 = n. XX□□□□□□	Pn8A8 = n. XX□□□□□□
4～7	Pn892	Pn8AA
8～11	Pn894	Pn8AC
12～15	Pn896	Pn8AE
16～19	Pn898	Pn8B0
20～23	Pn89A	Pn8B2
24～27	Pn89C	Pn8B4
28～31	Pn89E	Pn8B6
32～35	Pn8A0	Pn8B8
36～39	Pn8A2	Pn8BA
40～43	Pn8A4	Pn8BC
44～47	Pn8A6	Pn8BE

(Note) 1. Data are arranged in small byte storage order and expressed in hexadecimal.

9.5 The fault causes and treatment measures can be judged from the actions and states of servo motors.

The fault causes and treatment methods that can be judged from the actions and states of servo motors are as follows.

Please cut off the power supply of the servo system when checking and handling the items in the thick wire frame in the table below.

Fault contents	Reason	Confirmation method	The treatment measures
Don't start the servo motor	The control power is not switched on	Measure the voltage between terminals of control power supply.	Connect the wires correctly to turn the control power ON.
	The main circuit power is not connected	Measure the voltage between the power input terminals of the main circuit.	Connect the wires correctly to turn the power supply ON of the main circuit.
	The terminals of the input and output signal connector (CN1) have wiring errors and omissions	Confirm the connection status of the input and output signal connector (CN1) terminals.	Connect the input and output signal connector (CN1) terminals correctly.
	Wiring of servo motor main loop cable and encoder cable falls off	Confirm the connection status.	Correct wiring.
	The servo motor is overloaded.	Try no-load operation to confirm the load status.	Lighten the load or replace it with a servo motor with larger capacity.
	The type of encoder used is different from the setting of Pn002 = n.□X□□ (encoder use method)	Confirm the type of encoder used and the setting of Pn002 = n.X□□.	According to the type of encoder used Pn002 = n.□X□□.
	Incorrect distribution of input signals (Pn50A, Pn50B, Pn511, Pn516)	Confirm the distribution of input signals (Pn50A, Pn50B, Pn511, Pn516).	Input signals (Pn50A, Pn50B, Pn511, Pn516) are correctly allocated.
	No servo ON(SV-ON) command	Confirm the command of the upper device.	Input servo ON (SV_ON) command from the upper device.
	There is no ON(SENS_ON) command	Confirm the command of the upper device.	The commands are transmitted to the servo drive according to the correct sequence.
	The forward rotation side drive input (P-OT) signal is prohibited, and the reverse rotation side drive input is prohibited (N-OT) signal remains OFF	Confirm the P-OT signal or the N-OT signal.	Set the P-OT signal or N-OT signal to ON.
	The forced stop input (FSTP) signal remains OFF	Confirm FSTP signal.	• Set FSTP signal to ON. • When the forced stop function is not used, Please disable the function via Pn516 = n.□□□X (forced stop of input (FSTP) signal distribution).
	Servo drive failure	-	Replace the servo drive.
The servo motor runs instantaneously after stop motionless	Servo motor connection error	Confirm wiring.	Correct wiring.
	Incorrect wiring of encoder or serial conversion unit	Confirm wiring.	Correct wiring.

Fault contents	Reason	Confirmation method	The treatment measures
The action of servo motor is not stable	Poor cable connection of servo motor	The connector connection of power line (U, V, W phase) and encoder or serial conversion unit may be unstable. Confirm wiring.	Looseness of fastening terminals or connectors and correct wiring.
Servo motor running without command	Servo drive failure	Check whether the directions match.	Replace the servo drive
Dynamic brake (DB) does not operate	Pn00 = n.□□□X (stop method when servo OFF and Gr.1 alarm occurs) is improperly set	Confirm the set value of Pn001 = n.□□□X.	Properly set Pn001 = n.□□□X.
	DB resistor disconnection	Confirm the moment of inertia, speed and frequency of use of DB. It may be that the moment of inertia, speed, frequency of use of DB is too large or DB resistance is broken.	Replace the servo drive. In addition, in order to prevent disconnection, measures can be taken to reduce the load state.
	DB drive circuit failure	-	DB loop component failure. Replace the servo drive.
Abnormal sound from servo motor	When using the adjustment-free function (factory setting), the servo motor vibrates greatly	Confirm the waveform of motor speed.	Reduce the load below the allowable rotational inertia ratio or allowable mass ratio, or increase the load value set without adjustment value to reduce the rigidity value.
	Poor mechanical installation	Confirm the installation status of servo motor	Re-tighten the mounting screws.
	Poor mechanical installation	Confirm whether the coupling is eccentric.	Align the core of the coupling.
	Internal bearing failure	Confirm the sound and vibration near the bearing.	Replace the servo motor.
	The vibration source is cooperating with the machine	Confirm whether the moving parts on the machine side have foreign bodies entering or damaged or deformed.	Please contact the machine manufacturer.
	Due to the wrong specifications of the cables used for input and output signals, mutual interference occurred	Confirm whether the cables for input and output signals meet the specifications. The cable specification: double stranded shielded wire or double stranded unified shielded wire with core wire of more than 0.12 mm^2 and tinned soft copper stranded wire.	Use cables that meet specifications.
	Due to the long cable used for input and output signals, mutual interference occurs	Confirm the length of cable for input and output signals.	Make the length of cable for input and output signals within 3 m.
	Due to the wrong specification of cable for encoder, mutual interference occurs	Confirm whether the cables for input and output signals meet the specifications. The cable specification: double stranded shielded wire or double stranded unified shielded wire with core wire of more than 0.12 mm^2 and tinned soft copper stranded wire.	Use cables that meet specifications.
	Because the encoder cable is too long, mutual interference occurs	Confirm the cable length for encoder.	Set the length of encoder cable within 50m.
	Due to encoder cable damage, mutual interference occurs	Confirm whether the encoder cable is clamped and the cladding is damaged.	Replace encoder cable and change cable laying environment.
	Excessive mutual interference on encoder cable	Verify that the encoder cable is tied together or too close to the high current wire.	Change the laying environment of encoder cables so as not to be affected by surge voltage of high-current wires.
	The potential of FG changes due to the influence of servo motor side equipment (welding machine, etc.)	Confirm the grounding status of servo motor side equipment (forget grounding, incomplete grounding).	Properly ground the servo motor side equipment to prevent shunt to encoder side FG.
	Pulse calculation error of servo drive caused by mutual interference	Confirm whether there is mutual interference between encoder and signal line	Properly ground the servo motor side equipment to prevent shunt to encoder side FG.
	Encoder is affected by excessive vibration and shock	Confirm whether mechanical vibration occurs. Confirm the installation state of servo motor (precision of installation surface, fixed state, eccentric core).	Reduce mechanical vibration. Improve the installation state of servo motor.
	Encoder failure	-	Replace the servo motor
	Serial conversion unit failure	-	Replace the serial conversion unit.
When the frequency is about 200～400Hz, the motor vibrates	Improper matching of servo gain	Confirm whether gain adjustment has been implemented.	Perform automatic adjustment (no upper command).
	The speed loop gain (Pn100) is set too high.	Confirm the setting value of speed loop gain (PN100). Factory setting: Kv = 40.0 Hz	Set the correct speed loop gain (Pn100) setting.
	The set value of the position loop gain (Pn102) is too high	Confirm the set value of position ring gain (Pn102). Factory setting: Kp = 40.0/s	Set the correct setting value of position loop gain (Pn102).
	The speed loop integration time parameter (Pn101) is not set correctly	Confirm the set value of integral time parameter (Pn101) of speed loop. Factory setting: Ti = 20.0 ms	Set the correct speed loop integration time parameter (Pn101) setting value.
	The setting value of rotational inertia ratio or mass ratio (Pn103) is incorrect	Confirm the set value of the moment of inertia ratio or mass ratio (Pn103)	Set the correct moment of inertia or mass ratio (Pn103).

Fault contents	Reason	Confirmation method	The treatment measures
Excessive speed overshoot at start and stop	Improper matching of servo gain	Confirm whether gain adjustment has been implemented.	Perform automatic adjustment (no upper command).
	The speed loop gain (Pn100) is set too high	Confirm the setting value of speed loop gain (PN100). Factory setting: Kv = 40.0 Hz	Set the correct speed loop gain (Pn100) setting.
	The set value of the position loop gain (Pn102) is too high	Confirm the set value of position loop gain (Pn102). Factory setting: Kp = 40.0/s	Set the correct setting value of position loop gain (Pn102).
	The speed loop integration time parameter (Pn101) is not set correctly	Confirm the set value of integral time parameter (Pn101) of speed loop. Factory setting: Ti = 20.0 ms	Set the correct speed loop integration time parameter (Pn101) setting value.
	The setting value of rotational inertia ratio or mass ratio (Pn103) is incorrect	Confirm the set value of the moment of inertia ratio or mass ratio (Pn103).	Set the correct moment of inertia or mass ratio (Pn103).
	Torque command saturation	Confirm torque command waveform.	Use the mode switch function.
	Thrust limit (Pn483, Pn484) remains factory set	Thrust Limit: Factory Setting Pn483 = 30%, Pn484 = 30%	Set the correct thrust limit (Pn483, Pn484) value.
Error in absolute value encoder position deviation (deviation between the position when the power supply is OFF and the position when the power supply is ON again recorded by the upper device)	Mutual interference occurred due to incorrect specifications of cables used for encoders.	Confirm whether the cable for encoder meets the specification. The cable specification: double stranded shielded wire or double stranded unified shielded wire with core wire of more than 0.12mm^2 and tinned soft copper stranded wire.	Use cables that meet specifications.
	Because the encoder cable is too long, mutual interference occurs	Confirm the cable length for encoder.	Set the length of encoder cable within 50m.
	Due to encoder cable damage, mutual interference occurs	Confirm whether the encoder cable is clamped and the cladding is damaged.	Replace encoder cable and change cable laying environment.
	Excessive mutual interference on encoder cable	Verify that the encoder cable is tied together or too close to the high current wire.	Change the laying environment of encoder cables so as not to be affected by surge voltage of high-current wires.
	The potential of FG changes due to the influence of servo motor-side equipment (welding machine, etc.)	Confirm the grounding status of servo motor side equipment (forget grounding, incomplete grounding).	Properly ground the servo motor side equipment to prevent shunt to encoder side FG.
	Error in calculation of servo drive pulse due to mutual interference	Confirm whether there is mutual interference between encoder or serial conversion unit and signal line.	Anti-interference measures shall be taken for the connection of encoder or serial conversion unit.
	Encoder is affected by excessive vibration impact.	Confirm whether mechanical vibration occurs. Confirm the installation state of servo motor (precision of installation surface, fixed state, eccentric core).	Reduce mechanical vibration. And the installation state of the servo motor or the encoder is improved.
	Encoder failure	-	Replace the servo motor or encoder.
	Servo drive failure	-	Replace the servo drive.
	Error in reading rotation number data or absolute value encoder position data of upper device	Confirm the error detection part of the upper device.	Make the error detection part of the upper device work normally.
		The upper device is used to confirm whether the parity data has been checked. Prepare the data or absolute value of the number of Coil	Parity check of rotation number of coil data or absolute value encoder position data is performed.
		Confirm whether there is mutual interference on the cable between the servo drive and the upper device.	Anti-interference measures shall be taken to check the parity of rotation number of coil data or absolute value encoder position data again.
Overtravel (OT) occurred.	The drive input (P-OT/N-OT)signal of forward / reverse side is input	Confirm the voltage of the external power supply (+24 V) for the input signal.	Set the voltage of the external power supply (+24V) for the input signal to the correct value.
		Confirm the operating state of the over-travel limit switch.	Make the over-travel limit switch operate normally.
		Confirm the wiring of the overtravel limit switch.	Correct wiring of over-travel limit switch.
		Confirm the set value of over-travel input signal distribution (Pn50A or Pn50B).	Set parameters correctly.
	The misoperation of the drive input (P-OT/N-OT) signal on the forward/reverse side is prohibited	Confirm whether the voltage of the external power supply (+24 V) for the input signal fluctuates.	Eliminate voltage fluctuation of external power supply (+24 V) for input signal.
		Confirm whether the action state of the overtravel limit switch is unstable.	So that the action state of the overtravel limit switch is stable.
		Confirm the wiring of the overtravel limit switch (cable damage, screw fastening status, etc.).	Correct wiring of over-travel limit switch.
	Error in the signal of the drive input (P-OT/N-OT) that prohibits forward/reverse rotation for parameters (Pn50A = n.X□□□, Pn50B = n.□□□X)	Confirm P-OT signal allocation Pn50A= n.X□□□.	If other signals are assigned to PN50A = n.X□□□, the P-OT signal is reassigned to this parameter.
		Confirm N-OT signal distribution Pn50B=n.□□□X.	If other signals are assigned to Pn50B=n.□□□X, then the N-OT signal is reassigned to this parameter.
	Servo motor stop method selection error	Confirm the stop method when servo is OFF (Pn001 = n.□□□X, or pn 001 = n.□□□).	Select a servo motor stop method other than free running stop.

Fault contents	Reason	Confirmation method	The treatment measures
		Confirm the stop method for torque control (Pn001 = n.□□□X, or Pn001 = n.□□X□).	Select a servo motor stop method other than free running stop.
Incorrect stop position due to over travel (OT)	The position of the limit switch and the length of the toggle joint are improper	-	Set the limit switch at the appropriate position.
	The position of the overtravel limit switch is shorter than the inertia operation amount	-	Set the overtravel limit switch at the appropriate position.
Position deviation occurs (No alarm)	Mutual interference occurred due to incorrect specifications of cables used for encoders	Confirm whether the cable for encoder meets the specification The cable specification: double stranded shielded wire or double stranded unified shielded wire with core wire of more than 0.12mm^2 and tinned soft copper stranded wire.	Use cables that meet specifications.
	Because the encoder cable is too long, mutual interference occurs	Confirm the cable length for encoder.	Set the length of encoder cable within 50m.
	Due to encoder cable damage, mutual interference occurs	Confirm whether the encoder cable is clamped and the cladding is damaged.	Replace encoder cable and change cable laying environment.
	Excessive mutual interference on encoder cable	Verify that the encoder cable is tied together or too close to the high current wire.	Change the laying environment of encoder cables so as not to be affected by surge voltage of high-current wires.
	The potential of FG changes due to the influence of servo motor-side equipment (welding machine, etc.)	Confirm the grounding status of servo motor side equipment (forget grounding, incomplete grounding).	Properly ground the servo motor side equipment to prevent shunt to encoder side FG.
	Error in calculation of servo drive pulse due to mutual interference	Confirm whether there is mutual interference between encoder or serial conversion unit and signal line.	Anti-interference measures shall be taken for the connection of encoder or serial conversion unit.
	Encoder is affected by excessive vibration impact	Confirm whether mechanical vibration occurs. Confirm the installation state of servo motor (precision of installation surface, fixed state, eccentric core). Confirm the installation state of linear encoder (installation surface precision, fixing method).	Reduce mechanical vibration. And the installation state of the servo motor or the linear encoder is improved.
	Coupling failure of machine and servo motor	Verify that the coupling between the machine and the servo motor is misaligned.	Correctly fix the coupling of the machine and servo motor.
	Due to the wrong specifications of the cables used for input and output signals, mutual interference occurred	Confirm whether the cables for input and output signals meet the specifications. The cable specification: double stranded shielded wire or double stranded unified shielded wire with core wire of more than 0.12mm^2 and tinned soft copper stranded wire.	Use cables that meet specifications.
	Due to the long cable used for input and output signals, mutual interference occurs.	Confirm the length of cable for input and output signals.	Make the length of cable for input and output signals within 3m.
	Encoder failure (pulse unchanged)	-	Replace the servo motor or encoder.
	Servo drive failure	-	Replace the servo drive.
Servo motor overheating	Ambient temperature is too high	Measure the ambient temperature of the servo motor.	Set the ambient temperature below 40°C.
	Dirty surface of servo motor	Visual inspection confirms motor surface smudges.	Remove dirt, dust and oil stains on the motor surface.
	The servo motor is overloaded.	Confirm the load status through the monitor.	If overload occurs, reduce the load or replace it with servo drive and servo motor with larger capacity.

Chapter 10 List of parameter

10.1 List of servo parameters

10.1.1 Method for distinguishing the list

Indicates the number of the parameter

Indicates the number of bytes occupied by the parameter
•2 means 2 bytes
•4 means 4 bytes

When the factory setting values of Axis A and Axis b of the biaxial driver are inconsistent, the upper layer represents the factory parameters of Axis A, the lower layer represents the factory parameters of Axis b.

Indicates when the parameter changes and the change takes effect.
•Power restart: It means that the parameters will not take effect until the servo control power is turned off and the power is turned on again.

Pn No.	Size	Name	Setting range	Setting unit	Factory setting	Available time	Category	Model
Pn000	2	Function selection Basic switch 0	0000～10B1	-	0010 (axis A) 0000 (axis b)	Power restart	Setup	P/B

"X"
Represents a corresponding configurable parameter bit

Represents two categories of parameters:
•Setting, which means setting class parameters
•Adjustment, which means adjusting class parameters

n.□□□X	Rotation direction selection		Model
	0	The CCW direction is the forward rotation direction.	
	1	The CW direction is the forward rotation direction. (Reverse rotation)	

The function name of the corresponding parameter bit the following list is optional features

Indicates that this parameter is only valid for the corresponding model;
•P corresponds to models PSD-A□-□□A00, PSD-A □-□□D00
PSD-A □-□□A01, PSD-A □-□□D01
•B corresponds to models PSD-A □-□□A10, PSD-A □-□□D10
PSD-A □-□□A20, PSD-A □-□□D20
PSD-A □-□□A30, PSD-A □-□□D30
•By default, all model parameters are valid.

n.□□X□	Control mode selection		Remarks
	0	Speed control (analog command)	
	1	Position control (pulse sequence command)	
	2	Rotational moment control (analog command)	
	3	Internal set speed control (contact command)	
	4	Internal set speed control (contact ←command) speed control (analog command	
	5	Internal set speed control (contact ←command) position control (pulse sequence command)	
	6	Internal set speed control (contact ←command) torque control (analog command	
	7	Position control (pulse sequence ←command) speed control (analog command)	
	8	Position control (pulse sequence ←command) torque control (analog command)	
	9	Torque control (analog ←command) speed control (analog command)	
	A	Speed control (analog command) ←speed control with zero position fixing function	
	B	Position control (pulse sequence command) ←position control with command pulse disable function	

n.□X□□	Appointment parameters (do not change it)

Reserved parameters cannot be modified, otherwise the servo system may not operate normally.

n.X□□□	Startup selection when encoder is not connected	Remarks
	0	It is started as the corresponding servo drive of the rotary servo motor when the encoder is not connected.
	1	It is started as the corresponding servo drive of the linear servo motor when the encoder is not connected.

10.1.2 List of servo parameters

The parameter list is as follows.

(Note) The following parameters are factory settings and should not be changed.

- Appointment Parameters
- Parameters not recorded in this manual

Pn No.	Size	Name	Setting range	Setting Unit	Factory setting	Available time	Category	Remarks
Pn000	2	Function selection Basic switch 0	0000～10B1	-	0000	Power restart	Setup	-

n.□□□X	Rotation direction selection		Remarks
	0	The CCW direction is the forward rotation direction.	
	1	The CW direction is the forward rotation direction. (Reverse mode)	

n.□□X□	Control mode selection		Model
	0	Speed control (analog command)	P
	1	Position control (pulse sequence command)	
	2	Rotational moment control (analog command)	
	3	Internal set speed control (contact command)	
	4	Internal set speed control (contact command) ↔ speed control (analog command	
	5	Internal set speed control (contact command) ↔ position control (pulse sequence command)	
	6	Internal set speed control (contact command) ↔ torque control (analog command	
	7	Position control (pulse sequence command) ↔ speed control (analog command)	
	8	Position control (pulse sequence command) ↔ torque control (analog command)	
	9	Torque control (analog command) ↔ speed control (analog command)	
	A	Speed control (analog command) ↔ speed control with zero position fixing function	
	B	Position control (pulse sequence command) ↔ position control with command pulse disable function	

n.□X□□	Appointment parameters (do not change it)

n.X□□□	Startup selection when encoder is not connected		Remarks
	0	It is started as the corresponding servo drive of the rotary servo motor when the encoder is not connected.	
	1	It is started as the corresponding servo drive of the linear servo motor when the encoder is not connected.	

Pn No.	Size	Name	Setting range	Setting Unit	Factory setting	Available time	Category	Remarks
Pn001	2	Function selection application switch 1	0000～1142	-	0000	Power restart	Setup	-

n.□□□X	Servo OFF and Stop Method in Gr.1 Alarm		Remarks
	0	Stop the motor by DB (dynamic brake).	
	1	Stop the motor through DB, and then cancel DB.	
	2	Do not use DB, set the motor to run freely.	

n.□□X□	Stop Method when it is overtravel (OT)		Remarks
	0	DB stop or free running stop (stop method is the same as Pn001= n.□□□X).	
	1	The set torque of Pn406 is used as the maximum torque to decelerate and stop the motor, and then the servo lock state is entered.	
	2	The set torque of Pn406 is taken as the maximum torque to decelerate and stop the motor, and then enter the free running state.	
	3	According to the deceleration time of Pn30A, the motor decelerates and stops, and then enters the servo locking state.	
	4	According to the deceleration time of Pn30A, the motor will decelerate and stop, and then enter the free running state.	

n.□X□□	Selection of AC/DC input for main loop power supply		Remarks
	0	AC power is input from L1, L2, L3 and L3 terminals as the main loop power (no universal converter is used).	
	1	Between B1/⊕, ⊖ the input DC power supply is as the main loop power supply (using an external converter or a universal converter).	

n.X□□□	Appointment parameters (do not change it)

Pn No.	Size	Name	Setting range	Setting Unit	Factory setting	Available time	Category	Model
Pn002	2	Function selection application switch 2	0000～4213	-	0000	Power restart	Setup	P
					0011			B

n.□□□X	Speed/position control selection (T-REF assignment)		Model
	0	No T-REF allocation.	P
	1	Use T-REF as the external torque limit input. (Torque Limit Enabled in Bus Mode)	P （B）
	2	T-REF is used as torque feedforward input.	P
	3	When /P-CL and /N-CL are "valid", T-REF is used as external torque limiting input.	P

n.□□X□	Torque control selection (V-REF allocation)		Model
	0	No V-REF allocation.	P
	1	Use V-REF as the external speed limit input. (In bus mode, speed limit under torque control is enabled)	P （B）

n.□X□□	Method of use of encoder		Remarks
	0	Use the encoder according to its specifications.	
	1	The encoder is used as an incremental encoder.	
	2	The absolute value encoder is used as a single coil absolute value encoder.	

n.X□□□	Use method of external encoder		Remarks
	0	No external encoder is used.	
	1	It is used as "the motor rotates in CCW direction and the external encoder moves forward".	
	2	Appointment Parameters (Do Not Set)	
	3	It is used as "the motor rotates in CCW direction and the external encoder moves in reverse".	
	4	Appointment Parameters (Do Not Set)	

Pn008	2	Function selection application switch 8	0000～7121	-	4000	Power restart	Setup	

n.□□□X	Alarm/Warning Selection for Battery Undervoltage		Remarks
	0	Set the battery undervoltage as an alarm (A.830).	
	1	Set the battery undervoltage as a warning (A.930).	

n.□□X□	Function Selection in Undervoltage		Remarks
	0	Under voltage warning is not detected.	
	1	The undervoltage warning is detected, and the torque limit is executed by the upper device.	
	2	The undervoltage warning is detected, and torque limitation is performed through Pn424 and Pn425	

n.□X□□	Warning Check Out Selection		Remarks
	0	Check out warnings.	
	1	No warnings are detected (except A.971).	

n.X□□□	Appointment parameters (do not change it)

Pn009	2	Function selection application switch 9	0000～0121	-	0010	Power restart	Adjustment	-

n.□□□X	Appointment parameters (do not change it)		Remarks

n.□□X□	Current control mode selection		Remarks
	0	Select current control mode 0	
	1	Select current control mode 1	
	2	Select current control mode 2	

n.□X□□	Selection of Speed Detection Methods		Remarks
	0	Select Speed Check Out 1.	
	1	Select Speed Check Out 2.	

n.X□□□	Appointment parameters (do not change it)	Remarks

Pn No.	Size	Name	Setting range	Setting Unit	Factory setting	Available time	Category	Remarks
Pn00A	2	Function selection application switch A	0000～0044	-	0001	Power restart	Setup	-

n.□□□X	Stop Method in Case of Gr.2 Alarm		Remarks
	0	DB stop or free running stop (stop method is the same as Pn001 = n.□□□X).	
	1	The set torque of Pn406 is used as the maximum torque to decelerate and stop the motor. The state after stopping depends on the setting of Pn001 = n.□□□X.	
	2	The set torque of Pn406 is used as the maximum torque to decelerate and stop the motor. And then enter a free running state.	
	3	According to the deceleration time of Pn30A, the motor is decelerated and stopped. The state after stopping depends on the setting of Pn001 = n.□□□X.	
	4	According to the deceleration time of Pn30A, the motor will decelerate and stop, and then enter the free running state.	

n.□□X□	Stop method when forced to stop		Remarks
	0	DB stop or free running stop (stop method is the same as Pn001 = n.□□□X).	
	1	The set torque of Pn406 is used as the maximum torque to decelerate and stop the motor. The state after stopping depends on the setting of Pn001 = n.□□□X.	
	2	The set torque of Pn406 is used as the maximum torque to decelerate and stop the motor. And then enter a free running state.	
	3	According to the deceleration time of Pn30A, the motor is decelerated and stopped. The state after stopping depends on the setting of Pn001 = n.□□□X.	
	4	According to the deceleration time of Pn30A, the motor will decelerate and stop, and then enter the free running state.	

n.□X□□	Appointment parameters (do not change it)
n.X□□□	Appointment parameters (do not change it)

Pn00B	2	Function selection application switch B	0000～1121	-	0000	Power restart	Setup	-

n.□□□X	Operator parameter display selection		Remarks
	0	Only set parameters are displayed	
	1	Display all of the parameters	

n.□□X□	Stop Method in Case of Gr.2 Alarm		Remarks
	0	Zero speed stop	
	1	DB stop or free running stop (stop method is the same as Pn001 = n.□□□X).	
	2	Set the stop method by Pn00A = n.□□□X.	

n.□X□□	Power Input Selection for Servo Drive with Three-phase Input Specifications		Remarks
	0	Use three-phase power input.	
	1	Three-phase input specifications are used for single-phase power input.	

n.X□□□	Appointment parameters (do not change it)

Pn00D	2	Function selection application switch D	0000～1001	-	0000	Power restart	Setup	-

n. □□□X	Appointment parameters (do not change it)
n. □□X□	Appointment parameters (do not change it)
n.□X□□	Appointment parameters (do not change it)

n.X□□□	Overtravel Warning Check-out Selection	
	0	No over-travel warning is detected.
	1	Check out over-travel warning.

Pn010	2	Axis Address:（Modbus/CANopen/USB）	1～ 127	-	1	Power restart	Setup	-

Pn No.	Size	Name	Setting range	Setting Unit	Factory setting	Available time	Category	Model
Pn011	2	Modbus/CANopen Communication parameter selection switch	-	-	0100	Power restart	Setup	P

n.□□□X	Modbus communication baud rate selection	Remarks
0	9600 bps	
1	19200 bps	
2	38400 bps	
3	57600 bps	
4	115200 bps	

n.□□X□	Modbus communication protocol selection	Remarks
0	8, N, 1(Modbus RTU mode)	
1	8, E, 1(Modbus RTU mode)	
2	8, O, 1(Modbus RTU mode)	

n.□X□□	CANopen communication baud rate selection	Remarks
0	50K bps	
1	100K bps	
2	125K bps	
3	250K bps	
4	500K bps	
5	1M bps	

n.X□□□	CANopen communication enable switch	Remarks
0	Close CANopen communication	
1	Enable CANopen communication	

Pn013	2	Address of MECHATROLINK-II station	0000～00FE	-	0001	Power restart	Setup	B
Pn014	2	MECHATROLINK-II Communication specification setting	-	-	0011	Power restart	Setup	B

n.□□□X	Communication speed setting	Remarks
0	4M bps	
1	1M bps	

n.□□X□	Transfer byte settings	Remarks
0	17 bytes	
1	32 bytes	

n.□X□□	Appointment parameters (do not change it)

n.X□□□	Appointment parameters (do not change it)

Pn013	2	Address of MECHATROLINK-III station	0000～00FE	-	0021	Power restart	Setup	B
Pn014	2	MECHATROLINK-III Communication specification setting	-	-	0010	Power restart	Setup	B

n.□□□X	Appointment parameters (do not change it)	Remarks

n. □□X□	Transfer byte settings	Remarks
0	17 bytes	
1	32 bytes	

n.□X□□	Appointment parameters (do not change it)

n.X□□□	Appointment parameters (do not change it)

Pn013	2	EtherCAT station address	0000～FFFF	-	0001	Power restart	Setup	B
Pn014	2	EtherCAT station address selection mode	-	-	0000	Power restart	Setup	B

n.□□□X	Communication speed setting	Remarks
0	Set the parameter Pn013 as the station address of EtherCAT.	
1	Take the value of SII area (0004h) as the station address of EtherCAT	

n.X X X□	Appointment parameters (do not change it)

Pn No.	Size	Name	Setting range	Setting Unit	Factory setting	Available time	Category	Remarks
Pn100	2	Velocity loop gain	10～20000	0.1 Hz	400	Effective immediately	Adjustment	
Pn101	2	Velocity loop integration time parameter	15～51200	0.01 ms	2000	Effective immediately	Adjustment	
Pn102	2	Position loop gain	10～20000	0.1/s	400	Effective immediately	Adjustment	
Pn103	2	Moment of inertia ratio	0～20000	1%	100	Effective immediately	Adjustment	
Pn104	2	Gain of second speed loop	10～20000	0.1 Hz	400	Effective immediately	Adjustment	
Pn105	2	The second speed loop integration time parameter	15～51200	0.01 ms	2000	Effective immediately	Adjustment	
Pn106	2	2nd position loop gain	10～20000	0.1/s	400	Effective immediately	Adjustment	
Pn109	2	Feedforward	0～100	1%	0	Effective immediately	Adjustment	
Pn10A	2	Feedforward filtering time parameter	0～6400	0.01 ms	0	Effective immediately	Adjustment	
Pn10B	2	Gain class application switch	0000～5334	-	0000	-	Setup	-

n.□□□X	Mode switch selection		Available time	Remarks
	0	On condition of internal torque command (value setting: Pn10C).	Effective immediately	
	1	On condition of speed command (value setting: Pn10D).		
		On condition of speed command (value setting: Pn181).		
	2	Under the condition of acceleration (value setting: Pn10E).		
		Under the condition of acceleration (value setting: Pn182).		
	3	On condition of position deviation (value setting: Pn10F).		
	4	No mode switch function		

n.□□X□	Control Method of Speed Ring		Available time	Remarks
	0	PI Control	Power restart	
	1	I-P control		
	2～3	Appointment Parameters (Do Not Set)		

n.□X□□	Appointment parameters (do not change it)

n.X□□□	Appointment parameters (do not change it)

Pn10C	2	Mode switch (Torque command)	0～800	1%	200	Effective immediately	Adjustment	
Pn10D	2	Mode switch (Speed command)	0～10000	1 min^{-1}	0	Effective immediately	Adjustment	
Pn10E	2	Mode switch (Acceleration)	0～30000	1min^{-1}/S	0	Effective immediately	Adjustment	
Pn10F	2	Mode switch (Location deviation)	0～10000	1 Command unit	0	Effective immediately	Adjustment	
Pn11F	2	Position integration time parameter	0～50000	0.1 ms	0	Effective immediately	Adjustment	
Pn121	2	Friction compensation gain	10～1000	1%	100	Effective immediately	Adjustment	
Pn122	2	Second friction compensation gain	10～1000	1%	100	Effective immediately	Adjustment	
Pn123	2	Friction compensation coefficient	0～100	1%	0	Effective immediately	Adjustment	
Pn124	2	Friction compensation frequency correction	-10000～10000	0.1 Hz	0	Effective immediately	Adjustment	
Pn125	2	Friction compensation gain correction	1～1000	1%	100	Effective immediately	Adjustment	
Pn131	2	Gain switching time1	0～65535	1 ms	0	Effective immediately	Adjustment	
Pn132	2	Gain switching time2	0～65535	1 ms	0	Effective immediately	Adjustment	
Pn135	2	Gain switching latency 1	0～65535	1 ms	0	Effective immediately	Adjustment	
Pn136	2	Gain switching latency 2	0～65535	1 ms	0	Effective immediately	Adjustment	

Pn No.	Size	Name	Setting range	Setting Unit	Factory setting	Available time	Category	Remarks
Pn139	2	Automatic Gain Switching Class Switch 1	0000～0052	-	0000	Effective immediately	Adjustment	

n.□□□X	Gain switching selector switch
0	Manual gain switching The gain is manually switched by the G_SEL of the servo command output signal (SVCMD_IO).
1	Appointment Parameters (Do Not Set)
2	Automatic switching mode 1 When the switching condition A is satisfied, it is automatically switched from the first gain to the second gain. When the switching condition A fails, it is automatically switched from the second gain to the first gain.

n. □□X□	Switching conditiona
0	Location Complete Output (/COIN) Signal ON
1	Location Complete Output (/COIN) Signal OFF
2	Position nearby output (/NEAR) signal ON
3	Position nearby output (/NEAR) signal OFF
4	Position command filter output =0 and position command input OFF
5	Position command input ON

n.□X□□	Appointment parameters (do not change it)

n.X□□□	Appointment parameters (do not change it)

Pn13D	2	Current gain value	100～2000	1%	2000	Effective immediately	Adjustment	
Pn140	2	Model Tracking Control Class Switch	0000～1121	-	0100	Effective immediately	Adjustment	-

n. □□□X	Model tracking control selection	Remarks
0	Model tracking control is not used.	
1	Use model tracking control.	

n. □□X□	Vibration suppression selection	Remarks
0	Vibration suppression is not performed.	
1	Add vibration suppression function to specific frequency.	
2	Add vibration suppression function to 2 different frequencies.	

n. □X□□	Appointment parameters (do not change it)	Remarks
0	The vibration suppression function is not automatically adjusted in the process of performing automatic adjustment (without upper command), automatic adjustment (with upper command) and custom adjustment.	
1	The vibration suppression function is automatically adjusted in the process of performing automatic adjustment (without upper command), automatic adjustment (with upper command) and custom adjustment.	

n.X□□□	Speed Feed Forward (VFF)/ Torque Feed Forward Selection	Remarks
0	Model tracking control and speed/torque feedforward are not used at the same time.	
1	Model tracking control and speed/torque feedforward are used simultaneously.	

Pn141	2	Model tracking control gain	10～20000	0.1/s	500	Effective immediately	Adjustment	
Pn142	2	Model tracking control gain correction	500～2000	0.1%	1000	Effective immediately	Adjustment	
Pn143	2	Model tracking control bias (forward rotation direction)	0～10000	0.1%	1000	Effective immediately	Adjustment	
Pn144	2	Model tracking control bias (Reverse rotation direction)	0～10000	0.1%	1000	Effective immediately	Adjustment	
Pn145	2	Vibration suppression 1 frequency A	10～2500	0.1 Hz	500	Effective immediately	Adjustment	
Pn146	2	Vibration suppression 1 frequency B	10～2500	0.1 Hz	700	Effective immediately	Adjustment	
Pn147	2	Feedforward compensation of model tracking control speed	0～10000	0.1%	1000	Effective immediately	Adjustment	
Pn148	2	Model 2 tracking control gain	10～20000	0.1/s	500	Effective immediately	Adjustment	
Pn149	2	Model 2 tracking control gain correction	500～2000	0.1%	1000	Effective immediately	Adjustment	
Pn14A	2	Vibration suppression 2 frequency	10～2000	0.1 Hz	800	Effective immediately	Adjustment	
Pn14B	2	Vibration suppression 2 correction	10～1000	1%	100	Effective immediately	Adjustment	

Pn No.	Size	Name	Setting range	Setting Unit	Factory setting	Available time	Category	Remarks
Pn14F	2	Control switch	0000～0021	-	0021	Power restart	Adjustment	-

n. □□□X	Rotation direction selection		Remarks
	0	Select Model tracking control 1 mould.	
	1	Select Model tracking control 2 mould.	

n. □□X□	Adjustment free type selection		Remarks
	0	Select Adjustment-Free Type 1.	
	1	Select Adjustment-Free Type 2.	

n.□X□□	Appointment parameters (do not change it)

n.X□□□	Appointment parameters (do not change it)

Pn	Size	Name	Setting range	Setting Unit	Factory setting	Available time	Category	Remarks
Pn160	2	Anti-vibration control switch	0000～0011	-	0010	Effective immediately	Adjustment	-
Pn161	2	Type A vibration suppression frequency	10～20000	0.1 Hz	1000	Effective immediately	Adjustment	
Pn162	2	Correction of Type A Vibration Suppression Gain	1～1000	1%	100	Effective immediately	Adjustment	
Pn163	2	Type A vibration suppression damping gain	0～300	1%	0	Effective immediately	Adjustment	
Pn164	2	Type A suppression Correction of Filter Time Parameter 1	-1000～1000	0.01 ms	0	Effective immediately	Adjustment	
Pn165	2	Type A suppression Correction of Filter Time Parameter 2	-1000～1000	0.01 ms	0	Effective immediately	Adjustment	
Pn166	2	Type A vibration suppression damping gain 2	0～1000	1%	0	Effective immediately	Adjustment	

n. □□□X	Selection of type A vibration suppression control		Remarks
	0	Type A vibration suppression control is not used.	
	1	Using type A vibration suppression control	

n. □□X□	Adjustment selection of type A vibration suppression control		Remarks
	0	Type A vibration suppression control is not automatically adjusted in the process of executing automatic adjustment (without upper command), automatic adjustment (with upper command) and user-defined adjustment.	
	1	Type A vibration suppression control is automatically adjusted in the process of automatic adjustment (without upper command), automatic adjustment (with upper command), and self-defined adjustment.	

n.□X□□	Appointment parameters (do not change it)

n.X□□□	Appointment parameters (do not change it)

Pn	Size	Name	Setting range	Setting Unit	Factory setting	Available time	Category	Remarks
Pn170	2	Adjustment-free switch	0000～2711	-	1400	-	Setup	

n.□□□X	Adjustment free selection		Available time
	0	Make the adjustment-free function invalid.	Power restart
	1	Make the adjustment-free function effective.	

n.□□X□	Appointment parameters (do not change it)		Available time
	0	It is used for speed control	Power restart
	1	It is used for speed control and the upper device is used for position control.	

n.□X□□	Adjustment-free tuning value		Available time
	0～7	Set tuning value without adjustment.	Effective immediately

n.X□□□	No adjustment of load value		Available time
	0～2	Set load value without adjustment.	Effective immediately

Pn No.	Size	Name	Setting range	Setting Unit	Factory setting	Available time	Category	Model
Pn200	2	Position control command form selector switch	0000～2236	-	0000	Power restart	Setup	P

n.□□□X	Command pulse pattern	
	0	Sign+Pulse, Positive Logic
	1	CW+CCW Pulse Sequence, Positive Logic
	2	90° phase difference two-phase pulse (phase A+phase B) 1 times, positive logic
	3	90° phase difference two-phase pulse (phase A+phase B) 2 times, positive logic
	4	90° phase difference two-phase pulse (phase A+phase B) 4 times, positive logic
	5	Sign+Pulse Sequence, Negative Logic
	6	CW+CCW Pulse Sequence, Negative Logic

n.□□X□	Clear signal pattern	
	0	Clear position deviation when signal H level.
	1	Clear the position deviation when the signal is enhanced.
	2	Clear position deviation when signal l level.
	3	Clear the position deviation when the signal decays.

n.□X□□	Clear action	
	0	Clear the position deviation when the base is blocked (servo OFF and alarm occurs).
	1	The position deviation is not cleared (only cleared by the position deviation clear input (CLR) signal).
	2	Clear position deviation when alarm occurs.

n.X□□□	No adjustment of load value	
	0	Command for using a linear drive signal is input to the filter 1. （～ 1Mpps）
	1	Command input filter for open collector signal is used. （～ 200kpps）
	2	An instruction for using a linear drive signal is input to the filter 2. （1 ～ 4Mpps ）

Pn207	2	Position control function switch	0000～2210	-	0010	Power restart	Setup	-

n.□□□X	Appointment parameters (do not change it)	

n.□□X□	Position control selection	
	0	No V-REF allocation
	1	V-REF is used as the speed feed forward input.

n.□X□□	Appointment parameters (do not change it)

n.X□□□	Output Time for Positioning Complete Output（/COIN） Signal	
	0	When the absolute value of the position deviation is less than the positioning completion amplitude (Pn522), it is output.
	1	When the absolute value of the position deviation is less than the positioning completion amplitude (Pn522) and the filtered command of the position command is 0, it is output.
	2	The absolute value of the position deviation is smaller than the positioning completion amplitude (Pn522) and is output when the position command input is 0.

Pn20E	4	Electronic gear ratio (molecule)	1～1073741824	1	1	Power restart	Setup	
Pn210	4	Electronic gear ratio (denominator)	1～1073741824	1	1	Power restart	Setup	
Pn212	4	Encoder frequency division pulse count	16～1073741824	1 pitch /Rev	2500	Power restart	Setup	
Pn216	2	Position command acceleration and deceleration time parameters	0～65535	0.1ms	0	Effective after the motor stops	Setup	
Pn217	2	Moving average time of position command	0～10000	0.1ms	0	Effective after the motor stops	Setup	
Pn218	2	Command pulse input multiplying power	1～100	1 times	1	Effective immediately	Setup	
Pn230	2	Position control extension function switch	0000～0001	-	0000	Power restart	Setup	-

n.□□□X	Backlash compensation direction	
	0	Backlash-free compensation is carried out by commands in the positive direction.
	1	Backlash-free compensation is carried out by command in the opposite direction.

n.X X X□	Appointment parameters (do not change it)

Pn231	4	Backlash compensation	-500000～500000	0.1 Command unit	0	Effective immediately	Setup	
Pn233	2	Backlash compensation time parameter	0～65535	0.01 ms	0	Effective immediately	Setup	
Pn300	2	Speed command input gain	150～3000	0.01 V/ Rated speed	600	Effective immediately	Setup	

Pn301	2	Internal set speed 1	0～10000	1 min^{-1}	100	Effective immediately	Setup	

Pn No.	Size	Name	Setting range	Setting Unit	Factory setting	Available time	Category	Remarks
Pn302	3	Internal set speed 2	0～10000	1 min^{-1}	200	Effective immediately	Setup	
Pn303	3	Internal set speed 3	0～10000	1 min^{-1}	300	Effective immediately	Setup	
Pn304	2	Jog (JOG) speed	0～10000	1 min^{-1}	500	Effective immediately	Setup	
Pn305	2	Soft start acceleration time	0～10000	1 ms	0	Effective immediately	Setup	
Pn306	2	Soft start deceleration time	0～10000	1 ms	0	Effective immediately	Setup	
Pn307	2	Speed Command filtering time parameter	0～65535	0.01ms	40	Effective immediately	Setup	
Pn308	2	Time Parameters of Speed Feedback Filter	0～65535	0.01 ms	0	Effective immediately	Setup	
Pn30A	2	Deceleration Time for Servo OFF and Forced Stop	0～10000	1 ms	0	Effective immediately	Setup	
Pn30C	2	Speed feedforward moving average time	0～5100	0.1 ms	0	Effective immediately	Setup	
Pn310	2	Vibration detection switch	0000～0002	-	0000	Effective immediately	Setup	-

n.□□□X	Rotation direction selection	
	0	No vibration is detected.
	1	Warning issued after vibration detection (A.911).
	2	Alarm is issued after vibration is detected (A.520).
n.□□X□	Appointment parameters (do not change it)	
n.□X□□	Appointment parameters (do not change it)	
n.X□□□	Appointment parameters (do not change it)	

Pn311	2	Vibration detection sensitivity	50～500	1%	100	Effective immediately	Adjustment	
Pn312	2	Vibration detection value	0～5000	1 min^{-1}	50	Effective immediately	Adjustment	
Pn316	2	Maximum speed of motor	0～65535	1 min^{-1}	10000	Power restart	Setup	
Pn324	2	Estimated Starting Value of Moment of Inertia	0～20000	1%	300	Effective immediately	Setup	
Pn400	2	Torque command input gain	10～100	0.1 V/ Rated torque	30	Effective immediately	Setup	
Pn401	2	Section 1 First Torque Command Filter Time Parameters	0～65535	0.01 ms	100	Effective immediately	Adjustment	
Pn402	2	Forward rotation torque limit	0～800	1% *1	800	Effective immediately	Setup	
Pn403	2	Reversal torque limit	0～800	1% *1	800	Effective immediately	Setup	
Pn404	2	External torque limit on forward rotation side	0～800	1% *1	100	Effective immediately	Setup	
Pn405	2	Reverse side external torque limit	0～800	1% *1	100	Effective immediately	Setup	
Pn406	2	Emergency stop torque	0～800	1% *1	800	Effective immediately	Setup	
Pn407	2	Speed limit during torque control	0～10000	1 min^{-1}	10000	Effective immediately	Setup	
Pn408	2	Torque type function switch	0000～1111	-	0000	-	Setup	-

n.□□□X	Selection of Notch Filter 1		Available time
	0	Section 1 notch filter is invalid.	Effective immediately
	1	Use the notch filter of section 1.	
n.□□X□	Selection of speed limit		Available time
	0	The speed limit value uses "motor maximum speed", the smaller of Pn407 settings.	Power restart
	1	The speed limit value uses "speed detected by overspeed alarm", the smaller of the Pn407 set values.	
n.□X□□	Selection of Notch Filter 2		Available time
	0	Section 2 notch filter is invalid.	Effective immediately
	1	Use the notch filter of section 2.	
n.X□□□	Frictional compensation Function selection		Available time
	0	The friction compensation function is not used.	Effective immediately
	1	Use friction compensation function.	

Pn No.	Size	Name	Setting range	Setting Unit	Factory setting	Available time	Category	Remarks
Pn409	2	Frequency of 1st notch filter	50～5000	1 Hz	5000	Effective immediately	Adjustment	
Pn40A	2	Q value of the 1st notch filter	50～1000	0.01	70	Effective immediately	Adjustment	
Pn40B	2	The 1st notch filter depth.	0～1000	0.001	0	Effective immediately	Adjustment	
Pn40C	2	Frequency of 2nd notch filter	50～5000	1 Hz	5000	Effective immediately	Adjustment	
Pn40D	2	Q value of the 1st notch filter	50～1000	0.01	70	Effective immediately	Adjustment	
Pn40E	2	The 2nd notch filter depth.	0～1000	0.001	0	Effective immediately	Adjustment	
Pn40F	2	Section 2 2nd Torque Command Filter Time Parameters	100～5000	1 Hz	5000	Effective immediately	Adjustment	
Pn410	2	Section 2 Q Value of 2nd Torque Command Filter	50～100	0.01	50	Effective immediately	Adjustment	
Pn412	2	Section 1 2nd Torque Command Filter Time Parameters	0～65535	0.01 ms	100	Effective immediately	Adjustment	
Pn415	2	T-REF filtering time parameter	0～65535	0.01 ms	0	Effective immediately	Setup	
Pn416	2	Torque type function switch 2	0000～1111	-	0000	Effective immediately	Setup	

n.□□□X	Selection of Notch Filter 3	
	0	Section 3 notch filter is invalid.
	1	Use the notch filter of section 3.

n.□□X□	Selection of Notch Filter 4	
	0	Section 4 notch filter is invalid.
	1	Use the notch filter of section 4.

n.□X□□	Appointment parameters (do not change it)	
	0	Section 5 notch filter is invalid.
	1	Use the notch filter of section 5.

n.X□□□	Appointment parameters (do not change it)

Pn417	2	Frequency of 3rd notch filter	50～5000	1 Hz	5000	Effective immediately	Adjustment	
Pn418	2	Q value of the 3rd notch filter	50～1000	0.01	70	Effective immediately	Adjustment	
Pn419	2	The 3rd notch filter depth.	0～1000	0.001	0	Effective immediately	Adjustment	
Pn41A	2	Frequency of 4th notch filter	50～5000	1 Hz	5000	Effective immediately	Adjustment	
Pn41B	2	Q value of the 4th notch filter	50～1000	0.01	70	Effective immediately	Adjustment	
Pn41C	2	The 4th notch filter depth.	0～1000	0.001	0	Effective immediately	Adjustment	
Pn41D	2	Frequency of 5th notch filter	50～5000	1 Hz	5000	Effective immediately	Adjustment	
Pn41E	2	Q value of the 5th notch filter	50～1000	0.01	70	Effective immediately	Adjustment	
Pn41F	2	The 5th notch filter depth.	0～1000	0.001	0	Effective immediately	Adjustment	
Pn423	2	Speed pulsation compensation switch	0000～1111	-	0000	-	Setup	

n.□□□X	Selection of velocity pulse compensation function		Available time
	0	The speed pulsation compensation function is not used.	Effective immediately
	1	Use the speed pulsation compensation function.	

n.□□X□	Detection selection for inconsistent warning of velocity fluctuation compensation information		Available time
	0	A.942 was detected.	Power restart
	1	A.942 was not detected.	

n.□X□□	Selection of effective conditions for velocity fluctuation compensation		Available time
	0	Speed command	Power restart
	1	Revolving speed of motor	

n.X□□□	Appointment parameters (do not change it)

Pn424	2	Torque limitation when main loop voltage drops	0～100	1% *1	50	Effective immediately	Setup	

Pn No.	Size	Name	Setting range	Setting Unit	Factory setting	Available time	Category	Model
Pn425	2	When main loop voltage drops Torque limit release time	0～1000	1 ms	100	Effective immediately	Setup	
Pn426	2	Torque feedforward moving average time	0～5100	0.1 ms	0	Effective immediately	Setup	
Pn427	2	Velocity fluctuation compensation effective velocity	0～10000	1 min^{-1}	0	Effective immediately	Adjustment	
Pn456	2	Scan torque command amplitude	0～800	1%	15	Effective immediately	Adjustment	
Pn460	2	Notch filter adjustment switch 1	0000～0101	-	0101	Effective immediately	Adjustment	

n.□□□X	Notch filter adjustment option 1	
	0	In the process of performing automatic adjustment (without upper command), automatic adjustment (with upper command) and custom adjustment, the notch filter of the 1st stage will not be adjusted automatically.
	1	In the process of performing automatic adjustment (without upper command), automatic adjustment (with upper command) and custom adjustment, the notch filter of the 1st stage is automatically adjusted.

n.□□X□	Appointment parameters (do not change it)

n.□X□□	Notch filter adjustment option 2	
	0	In the process of performing automatic adjustment (without upper command), automatic adjustment (with upper command) and custom adjustment, the notch filter of the 2nd stage is automatically adjusted.
	1	In the process of performing automatic adjustment (without upper command), automatic adjustment (with upper command) and custom adjustment, the notch filter of the 2nd stage is automatically adjusted.

n.X□□□	Notch filter adjustment option 3	
	0	When the adjustment-free is invalid (manual gain), the notch filters of the 1st and 2nd segments will not be automatically adjusted.
	1	When no adjustment is effective (manual gain), the notch filters of the 1st and 2nd segments are automatically adjusted. (suitable for belt mechanism)
	2	When no adjustment is effective (manual gain), the notch filters of the 1st and 2nd segments are automatically adjusted. (Suitable for ball screw mechanism or linear servo motor)
	3	When no adjustment is effective (manual gain), the notch filters of the 1st and 2nd segments are automatically adjusted. (Rigid Body System)

Pn49F	2	Velocity fluctuation compensation effective velocity	0～10000	1 mm/s	0	Effective immediately	Adjustment	
Pn501	2	Zero position fixing value	0～10000	1 min^{-1}	10	Effective immediately	Setup	
Pn502	2	Rotation detection value	1～10000	1 min^{-1}	20	Effective immediately	Setup	
Pn503	2	Speed consistent signal output range	0～100	1 min^{-1}	10	Effective immediately	Setup	
Pn506	2	Brake command- Servo OFF delay time	0～50	10 ms	0	Effective immediately	Setup	
Pn507	2	Brake command output speed value	0～10000	1 min^{-1}	100	Effective immediately	Setup	
Pn508	2	Servo OFF- Brake Command Wait Time	10～100	1 min^{-1}	50	Effective immediately	Setup	
Pn509	2	Instant stop hold time	20～50000	10 ms	20	Effective immediately	Setup	

Pn No.	Size	Name	Setting range	Setting Unit	Factory setting	Available time	Category	Model
Pn50A	2	Input signal selection 1	0000～9991	-	1801 (axis A) 5841 (axis b)	Power restart	Setup	P
					0801 (axis A) 0841 (axis b)			B

n.□□□X	Allocation mode of input signals	Remarks
0	Appointment Parameters (Do Not Set)	
1	According to different signals.	

n.□□X□	Allocation of servo ON input (/S-ON) signal	Remarks
0	CN1-IN0 takes effect when the input signal is ON.	
1	CN1-IN1 takes effect when the input signal is ON.	
2	CN1-IN2 takes effect when the input signal is ON.	
3	CN1-IN3 takes effect when the input signal is ON.	
4	CN1-IN4 takes effect when the input signal is ON.	
5	CN1-IN5 takes effect when the input signal is ON.	
6	CN1-IN6 takes effect when the input signal is ON.	
7	CN1-IN7 takes effect when the input signal is ON.	
8	Fixed the signal as "invalid" all the time.	
9	Set the signal to "active" at all times.	

n.□X□□	P action command input (/P-CON) signal distribution	Remarks
0～9	Same distribution as servo on input (/S-ON) signal.	

n.X□□□	Prohibit forward rotation side drive input (P-OT) signal allocation	Remarks
0	When the input signal of CN1-IN0 is ON (closed), forward rotation side drive can be performed.	
1	When the input signal of CN1-IN1 is ON (closed), forward rotation side drive can be performed.	
2	When the input signal of CN1-IN2 is ON (closed), forward rotation side drive can be performed.	
3	When the input signal of CN1-IN3 is ON (closed), forward rotation side drive can be performed.	
4	When the input signal of CN1-IN4 is ON (closed), forward rotation side drive can be performed.	
5	When the input signal of CN1-IN5 is ON (closed), forward rotation side drive can be performed.	
6	When the input signal of CN1-IN6 is ON (closed), forward rotation side drive can be performed.	
7	When the input signal of CN1-IN7 is ON (closed), forward rotation side drive can be performed.	
8	The signal is always fixed as "forward rotation side drivable".	
9	The signal is always fixed as "No Forward Turn Side Drive".	

Pn No.	Size	Name	Setting range	Setting Unit	Factory setting	Available time	Category	Model
Pn50B	2	Input signal selection 2	0000～9999	-	8832 (axis A) 8876 (axis b)	Power restart	Setup	P
					8881 (axis A) 8885 (axis b)			B

n.□□□X	Prohibit reverse rotation side drive input (P-OT) signal allocation	Remarks
0	When the input signal of CN1-IN0 is ON (closed), reverse rotation side drive can be performed.	
1	When the input signal of CN1-IN1 is ON (closed), reverse rotation side drive can be performed.	
2	When the input signal of CN1-IN2 is ON (closed), reverse rotation side drive can be performed.	
3	When the input signal of CN1-IN3 is ON (closed), reverse rotation side drive can be performed.	
4	When the input signal of CN1-IN4 is ON (closed), reverse rotation side drive can be performed.	
5	When the input signal of CN1-IN5 is ON (closed), reverse rotation side drive can be performed.	
6	When the input signal of CN1-IN6 is ON (closed), reverse rotation side drive can be performed.	
7	The signal is always fixed as "No reversal Turn Side Drive".	
8	The signal is always fixed as "reverse rotation side drivable".	
9	When the input signal of CN1-IN0 is OFF (cut off), reverse rotation side drive can be performed.	

n.□□X□	Assignment of Alarm Reset Input (/ALM-RST) Signal	Remarks
0	The input signal of CN1-IN0 is valid from the edge of OFF(cut off) to ON(closed).	
1	The input signal of CN1-IN1 is valid from the edge of OFF(cut off) to ON(closed).	
2	The input signal of CN1-IN2 is valid from the edge of OFF(cut off) to ON(closed).	
3	The input signal of CN1-IN3 is valid from the edge of OFF(cut off) to ON(closed).	
4	The input signal of CN1-IN4 is valid from the edge of OFF(cut off) to ON(closed).	
5	The input signal of CN1-IN5 is valid from the edge of OFF(cut off) to ON(closed).	
6	The input signal of CN1-IN6 is valid from the edge of OFF(cut off) to ON(closed).	
7	The input signal of CN1-IN7 is valid from the edge of OFF(cut off) to ON(closed).	
8	Fixed the signal as "invalid" all the time.	
9	Appointment Parameters (Do Not Set)	

n.□X□□	Distribution of external torque limit input（/P-CL） signal on forward rotation side)	Remarks
0～9	Same distribution as servo on input (/S-ON) signal.	

n.X□□□	Distribution of external torque limit input(/P-CL) signal on reverse rotation side)	Remarks
0～9	Same distribution as servo on input (/S-ON) signal.	

Pn No.	Size	Name	Setting range	Setting Unit	Factory setting	Available time	Category	Remarks
Pn50C	2	Input signal selection 3	0000～9999	-	8888	Power restart	Setup	-

n.□□□X	Distribution of motor rotation direction switching input (/SPD-D) signal		Remarks
	0	CN1-IN0 takes effect when the input signal is ON.	
	1	CN1-IN1 takes effect when the input signal is ON.	
	2	CN1-IN2 takes effect when the input signal is ON.	
	3	CN1-IN3 takes effect when the input signal is ON.	
	4	CN1-IN4 takes effect when the input signal is ON.	
	5	CN1-IN5 takes effect when the input signal is ON.	
	6	CN1-IN6 takes effect when the input signal is ON.	
	7	CN1-IN7 takes effect when the input signal is ON.	
	8	Fixed the signal as "invalid" all the time.	
	9	Set the signal to "active" at all times.	

n.□□X□	Internal setting speed switching input (/SPD-A) signal distribution		Remarks
	0～9	The distribution of signals is the same as that of motor rotation direction switching input (/SPD-D).	

n.□X□□	Internal setting speed switching input (/SPD-B) signal distribution		Remarks
	0～9	The distribution of signals is the same as that of motor rotation direction switching input (/SPD-D).	

n.X□□□	The control mode switches the distribution of input (/C-SEL) signals		Remarks
	0～9	The distribution of signals is the same as that of motor rotation direction switching input (/SPD-D).	

Pn No.	Size	Name	Setting range	Setting Unit	Factory setting	Available time	Category	Remarks
Pn50D	2	Input signal selection 4	0000～0999	-	0888	Power restart	Setup	-

n.□□□X	Zero position fixing input signals		Remarks
	0	CN1-IN0 takes effect when the input signal is ON.	
	1	CN1-IN1 takes effect when the input signal is ON.	
	2	CN1-IN2 takes effect when the input signal is ON.	
	3	CN1-IN3 takes effect when the input signal is ON.	
	4	CN1-IN4 takes effect when the input signal is ON.	
	5	CN1-IN5 takes effect when the input signal is ON.	
	6	CN1-IN6 takes effect when the input signal is ON.	
	7	CN1-IN7 takes effect when the input signal is ON.	
	8	Fixed the signal as "invalid" all the time.	
	9	Set the signal to "active" at all times.	

n.□□X□	The command pulse prohibits the distribution of the input (/INHIBIT) signal		Remarks
	0～9	Same distribution as zero position fixing input signals	

n.□X□□	Distribution of gain switching input(/ G-SEL) signals		Remarks
	0～9	Same distribution as zero position fixing input signals	

n.X□□□	Appointment parameters (do not change it)

Pn No.	Size	Name	Setting range	Setting Unit	Factory setting	Available time	Category	Remarks
Pn50E	2	Output signal selection 1	0000～6666	-	6611 (axis A) 6644 (axis b)	Power restart	Setup	-

n.□□□X	Positing complete output(/COIN) signal distribution		Remarks
	0	The above signals are output from CN1-OUT0 (7, 8) output terminals.	
	1	The above signals are output from CN1-OUT1 (9, 10) output terminals.	
	2	The above signals are output from CN1-OUT2 (11, 12) output terminals.	
	3	The above signals are output from CN1-OUT3 (32, 33) output terminals.	
	4	The above signals are output from CN1-OUT4 (34, 35) output terminals.	
	5	The above signals are output from CN1-OUT5 (36, 37) output terminals.	
	6	Invalid (not using the above signal output).	

n.□□X□	Distribution of speed consistent output (/V-CMP) signal		Remarks
	0～6	Same as positing complete output(/COIN) signal distribution	

n.□X□□	Rotation detection output（/TGON） signal distribution		Remarks
	0～6	Same as positing complete output(/COIN) signal distribution	

n.X□□□	Distribution of servo ready output (/S-RDY) signal		Remarks
	0～6	Same as positing complete output(/COIN) signal distribution	

Pn No.	Size	Name	Setting range	Setting Unit	Factory setting	Available time	Category	Remarks
Pn50F	2	Output signal selection 2	0000～6666	-	6611 (axis A) 6644 (axis b)	Power restart	Setup	-

n.□□□X	Distribution of torque limit detection output (/CLT) signal	Remarks
0	The above signals are output from CN1-OUT0 (7, 8) output terminals.	
1	The above signals are output from CN1-OUT1 (9, 10) output terminals.	
2	The above signals are output from CN1-OUT2 (11, 12) output terminals.	
3	The above signals are output from CN1-OUT3 (32, 33) output terminals.	
4	The above signals are output from CN1-OUT4 (34, 35) output terminals.	
5	The above signals are output from CN1-OUT5 (36, 37) output terminals.	
6	Invalid (not using the above signal output).	

n.□□X□	Distribution of speed limit detection output (/VLT) signal	Remarks
0～6	Same as distribution of torque limit detection output (/CLT) signal	

n.□X□□	Distribution of brake control output (/BK) signal	Remarks
0～6	Same as distribution of torque limit detection output (/CLT) signal	

n.X□□□	Distribution of warning output (/WARN) signal	Remarks
0～6	Same as distribution of torque limit detection output (/CLT) signal	

Pn510	2	Output signal selection 3	0000～6666	-	0666 (axis A) 3666 (axis b)	Power restart	Setup	-

n.□□□X	Distribution of position nearby output (/NEAR) signal	Remarks
0	The above signals are output from CN1-OUT0 (7, 8) output terminals.	
1	The above signals are output from CN1-OUT1 (9, 10) output terminals.	
2	The above signals are output from CN1-OUT2 (11, 12) output terminals.	
3	The above signals are output from CN1-OUT3 (32, 33) output terminals.	
4	The above signals are output from CN1-OUT4 (34, 35) output terminals.	
5	The above signals are output from CN1-OUT5 (36, 37) output terminals.	
6	Invalid (not using the above signal output).	

n.□□X□	Distribution of output （/PGC) signal by encoder C pulse
0～6	Same as distribution of torque limit detection output (/CLT) signal

n.□X□□	Distribution of command pulse input multiplication switching output (/PSELA) Signal
0～6	Same as distribution of position nearby output（/NEAR） signal the normal power supply OFF

n.X□□□	Distribution of Alarm output (ALM) signal
0～6	Same as distribution of torque limit detection output (/CLT) signal

Pn No.	Size	Name	Setting range	Setting Unit	Factory setting	Available time	Category	Model
Pn511	2	Input signal selection 4	0000～9999	-	8888	Power restart	Setup	P
					8836 (axis A) 8872 (axis b)			B

n.□□□X	Distribution of input (/DEC) signal of origin reset deceleration switch	
	0	CN1-IN0 takes effect when the input signal is ON.
	1	CN1-IN1 takes effect when the input signal is ON.
	2	CN1-IN2 takes effect when the input signal is ON.
	3	CN1-IN3 takes effect when the input signal is ON.
	4	CN1-IN4 takes effect when the input signal is ON.
	5	CN1-IN5 takes effect when the input signal is ON.
	6	CN1-IN6 takes effect when the input signal is ON.
	7	CN1-IN7 takes effect when the input signal is ON.
	8	Fixed the signal as "invalid" all the time.
	9	Set the signal to "active" at all times.

n.□□X□	Distribution of external latch input 1 (/EXT1) signal	
	0～4	Fixed the signal as "invalid" all the time.
	5	CN1-IN5 takes effect when the input signal is ON.
	6	CN1-IN6 takes effect when the input signal is ON.
	7	CN1-IN7 takes effect when the input signal is ON.
	8～C	Fixed the signal as "invalid" all the time.
	D	CN1-IN5 is valid when the input signal is OFF(cut off).
	E	CN1-IN6 is valid when the input signal is OFF(cut off).
	F	CN1-IN7 is valid when the input signal is OFF(cut off).

n.□X□□	Distribution of external latch input 2 (/EXT2) signal	
	0～F	Same distribution as external latch input 1(/EXT1) signal.

n.X□□□	Distribution of external latch input 3 (/EXT3) signal	
	0～F	Same distribution as external latch input 1(/EXT1) signal.

Pn512	2	Output signal inversion setting 0	0000～1111	-	0000	Power restart	Setup	-

n.□□□X	CN1-OUT0 (7, 8) terminal output signal inversion	
	0	Not reverse signal.
	1	Reverses the signal.

n.□□X□	CN1-OUT1 (9, 10) terminal output signal inversion	
	0	Not reverse signal.
	1	Reverses the signal.

n.□X□□	CN1-OUT2 (11, 12) terminal output signal inversion	
	0	Not reverse signal.
	1	Reverses the signal.

n.X□□□	CN1-OUT3 (32, 33) terminal output signal inversion	
	0	Not reverse signal.
	1	Reverses the signal.

Pn513	2	Output signal inversion setting 1	0000～0011	-	0000	Power restart	Setup	-

n.□□□X	CN1-OUT4 (34, 35) terminal output signal inversion	
	0	Not reverse signal.
	1	Reverses the signal.

n.□□X□	CN1-OUT5 (36, 37) terminal output signal inversion	
	0	Not reverse signal.
	1	Reverses the signal.

n.□X□□	Appointment parameters (do not change it)

n.X□□□	Appointment parameters (do not change it)

Pn No.	Size	Name	Setting range	Setting Unit	Factory setting	Available time	Category	Remarks
Pn515	2	Output signal selection 5	0000～9999	-	0000	Power restart	Setup	-

n.□□□X	Appointment parameters (do not change it)	
n.□□X□	Distribution of command pulse input multiplication switching input (/PSEL) Signal	
	0	CN1-IN0 takes effect when the input signal is ON.
	1	CN1-IN1 takes effect when the input signal is ON.
	2	CN1-IN2 takes effect when the input signal is ON.
	3	CN1-IN3 takes effect when the input signal is ON.
	4	CN1-IN4 takes effect when the input signal is ON.
	5	CN1-IN5 takes effect when the input signal is ON.
	6	CN1-IN6 takes effect when the input signal is ON.
	7	CN1-IN7 takes effect when the input signal is ON.
	8	Fixed the signal as "invalid" all the time.
	9	Set the signal to "active" at all times.
n.□X□□	Appointment parameters (do not change it)	
n.X□□□	Appointment parameters (do not change it)	

Pn No.	Size	Name	Setting range	Setting Unit	Factory setting	Available time	Category	Remarks
Pn516	2	Input signal selection 6	0000～9999	-	8888	Power restart	Setup	-

n.□□□X	Distribution of forced stop input (FSTP) signal		Remarks
	0	When the input signal of CN1-IN0 is ON (closed), drive can be performed.	
	1	When the input signal of CN1-IN1 is ON (closed), drive can be performed.	
	2	When the input signal of CN1-IN2 is ON (closed), drive can be performed.	
	3	When the input signal of CN1-IN3 is ON (closed), drive can be performed.	
	4	When the input signal of CN1-IN4 is ON (closed), drive can be performed.	
	5	When the input signal of CN1-IN5 is ON (closed), drive can be performed.	
	6	When the input signal of CN1-IN6 is ON (closed), drive can be performed.	
	7	CN1-IN7 takes effect when the input signal is ON.	
	8	Fixed the signal as "invalid" all the time.	
	9	Set the signal to "active" at all times.	
n.□X□□	Appointment parameters (do not change it)		
n.X□□□	Appointment parameters (do not change it)		

Pn No.	Size	Name	Setting range	Setting Unit	Factory setting	Available time	Category	Remarks
Pn517	2	Input signal inversion setting 0	0000～1111	-	0000	Power restart	Setup	-

n.□□□X	CN1-IN0 terminal input signal inversion	
	0	Not reverse signal.
	1	Reverses the signal.
n.□□X□	CN1-IN1 terminal input signal inversion	
	0	Not reverse signal.
	1	Reverses the signal.
n.□X□□	CN1-IN2 terminal input signal inversion	
	0	Not reverse signal.
	1	Reverses the signal.
n.X□□□	CN1-IN3 terminal input signal inversion	
	0	Not reverse signal.
	1	Reverses the signal.

Pn No.	Size	Name	Setting range	Setting Unit	Factory setting	Available time	Category	Model
Pn518	2	Input signal inversion setting 2	0000～1111	-	0000	Power restart	Setup	-

n.□□□X	CN1-IN4 terminal input signal inversion	
	0	Not reverse signal.
	1	Reverses the signal.
n.□□X□	CN1-IN5 terminal input signal inversion	
	0	Not reverse signal.
	1	Reverses the signal.
n.□X□□	CN1-IN6 terminal input signal inversion	
	0	Not reverse signal.
	1	Reverses the signal.
n.X□□□	CN1-IN7 terminal input signal inversion	
	0	Not reverse signal.
	1	Reverses the signal.

Pn51B	4	Between motor-load position Excessive deviation detected value	0～1073741824	1 Command unit	1000	Effective immediately	Setup	
Pn51E	2	Warning value for excessive position deviation	10～100	1%	100	Effective immediately	Setup	
Pn520	4	Position deviation is too large warning value	1～1073741823	1 Command unit	5242880	Effective immediately	Setup	
Pn522	4	Positioning completion amplitude	0～1073741824	1 Command unit	7	Effective immediately	Setup	
Pn524	4	NEAR signal range	1～1073741824	1 Command unit	1073741824	Effective immediately	Setup	
Pn526	4	Warning value for excessive position deviation when servo ON	1～1073741823	1 Command unit	5242880	Effective immediately	Setup	
Pn528	2	Warning value for excessive position deviation when servo ON	10～100	1%	100	Effective immediately	Setup	
Pn529	2	The speed limit value when the servo ON	0～10000	1 min^{-1}	10000	Effective immediately	Setup	
Pn52A	2	The product value of 1 circle of full closed loop rotation	0～100	1%	20	Effective immediately	Adjustment	
Pn52B	2	Overload warning value	1～100	1%	20	Effective immediately	Setup	
Pn52C	2	Motor overload detection base current decreases ratings	10～100	1%	100	Power restart	Setup	
Pn52F	2	Monitoring display when power is turned on	0000～0FFF	-	0FFF	Effective immediately	Setup	
Pn530	2	Program JOG run class switch	0000～0005	-	0000	Effective immediately	Setup	

n.□□□X	Program JOG run parameter	
	0	(waiting time Pn535→ forward movement Pn531) * number of movements Pn536
	1	(waiting time Pn535→ reverse movement Pn531) * number of movements Pn536
	2	(waiting time Pn535→ forward movement Pn531) * number of movements Pn536 (waiting time Pn535→ reverse movement Pn531) * number of movements Pn536
	3	(waiting time Pn535→ reverse movement Pn531) * number of movements Pn536 (waiting time Pn535→ forward movement Pn531) * number of movements Pn536
	4	(waiting time Pn535→ forward movement Pn531→ waiting time Pn535→ reverse movement Pn531)× number of movements Pn536
	5	(wait time Pn535→ reverse movement Pn531→ wait time Pn535→ forward movement Pn531)× movement times Pn536
n.□□X□	Appointment parameters (do not change it)	
n.□X□□	Appointment parameters (do not change it)	
n.X□□□	Appointment parameters (do not change it)	

Pn531	4	Program JOG move distance	0～1073741824	1 Command unit	32768	Effective immediately	Setup	
Pn533	2	Program JOG movement speed	1～10000	1 min^{-1}	500	Effective immediately	Setup	
Pn534	2	Program JOG acceleration and deceleration time	2～10000	1 ms	100	Effective immediately	Setup	
Pn535	2	Program JOG wait time	0～10000	1 ms	100	Effective immediately	Setup	
Pn536	2	Number of program JOG moves	0～1000	Times	1	Effective immediately	Setup	

Pn No.	Size	Name	Setting range	Setting Unit	Factory setting	Available time	Category	Remarks
Pn548	2	Track the specified alert number	0000～FFFF	-	0000	Effective immediately	Setup	
Pn560	2	Residual vibration detection amplitude	1～3000	0.1%	400	Effective immediately	Setup	
Pn561	2	Overshoot detection value	0～100	1%	100	Effective immediately	Setup	
Pn600	2	Regenerative resistance capacity *2	Depending on the model *3	10W	0	Effective immediately	Setup	
Pn601	2	DB resistance capacity	0～65535	10J	0	Power restart	Setup	
Pn603	2	Regenerative resistor value	0～65535	10 mΩ	0	Effective immediately	Setup	
Pn604	2	DB resistance value	0～65535	10 mΩ	0	Power restart	Setup	
Pn800	2	Communication control	0000～1FF3	-	1040	Power restart	Setup	-

n.□□□X	MECHATROLINK communication inspection mask (for debugging)	
	0	Usually
	1	Ignore communication exceptions (A.E60).
	2	Ignore WDT exception (A.E50).
	3	At the same time, the communication anomaly (A.E60) and WDT anomaly (A.E50) are ignored.

n.□□X□	Warning check mask	
	0	Usually
	1	Ignore data setting warning (A.94□).
	2	Ignore the command warning (A.95□).
	3	Ignore A.94□, A.95□
	4	Ignore communication warnings (A.96□).
	5	Ignore A.94□, A.96□
	6	Ignore A.95□, A.96□
	7	Ignore A.94□, A.95□, A.96□
	8	Ignore data setting warnings (A.97A, A.97b).
	9	Ignore A.94□, A.97A, A.97b□
	A	Ignore A.95□, A.97A□, A.97b□
	B	Ignore A.94□, A.95□, A.97A□□, A.97b□.
	C	Ignore A.96□, A.97A, A.97b□
	D	Ignore A.94□, A.96□, A.97A□□, A.97b□.
	E	Ignore A.95□, A.96□, A.97A□□, A.97b□.
	F	Ignore A.94□, A.95□, A96, A.97A□□, A.97b□.

n.□X□□	Appointment parameters (do not change it)

n.X□□□ M3	Warning auto clear selection (for debugging) *6	
	0	Warning hold (for commissioning)
	1	Warning auto clear (MECHATROLINK-III specification)

Pn No.	Size	Name	Setting range	Setting Unit	Factory setting	Available time	Category	Remarks
Pn801	2	Function selection application 6 (soft LS)	0000～0103	-	0003	Effective immediately	Setup	

n.□□□X	Soft limit function	
	0	Set the soft limit on both sides to be valid.
	1	Set the forward turning side soft limit to be invalid.
	2	Set the reverse side soft limit to be invalid.
	3	Set the soft limit on both sides to be invalid

n.□□X□	Appointment parameters (do not change it)

n.□X□□	Soft limit check by command	
	0	No command soft limit check
	1	There is command soft limit check

n.X□□□	Appointment parameters (do not change it)

Pn No.	Size	Name	Setting range	Setting Unit	Factory setting	Available time	Category	Remarks
Pn803	2	Origin position range	0～250	1 Command unit	10	Effective immediately	Setup	
Pn804	4	Forward side soft limit	-1073741823～1073741823	1 Command unit	1073741823	Effective immediately	Setup	
Pn806	4	Reverse side soft limit	-1073741823～1073741823	1 Command unit	-1073741823	Effective immediately	Setup	
Pn808	4	Absolute value encoder origin position deviation	-1073741823～1073741823	1 Command unit	0	Effective immediately *4	Setup	

Pn No.	Size	Name	Setting range	Setting Unit	Factory setting	Available time	Category	Remarks
Pn80A	2	Section 1 linear acceleration parameters	1～65535	10000 Command unit/s^2	100	Effective immediately *5	Setup	
Pn80B	2	Section 2 linear acceleration parameters	1～65535	10000 Command unit/s^2	100	Effective immediately *5	Setup	
Pn80C	2	Accelerating parameter switching speed	0～65535	10000 Command unit/s^2	0	Effective immediately *5	Setup	
Pn80D	2	Section 1 linear deceleration parameters	1～65535	10000 Command unit/s^2	100	Effective immediately *5	Setup	
Pn80E	2	Section 2 linear deceleration parameters	1～65535	10000 Command unit/s^2	100	Effective immediately *5	Setup	
Pn80F	2	Deceleration parameter switching speed	0～65535	10000 Command unit/s^2	0	Effective immediately *5	Setup	
Pn810	2	Exponential function acceleration and deceleration bias	0～65535	10000 Command unit/s^2	0	Effective immediately	Setup	
Pn811	2	Parameters of exponential function during acceleration and deceleration	0～5100	0.1 ms	0	Effective immediately	Setup	
Pn812	2	Average moving time	0～5100	0.1 ms	0	Effective immediately	Setup	
Pn814	4	External positioning final movement distance	-1073741823～1073741823	1 Command unit	100	Effective immediately	Setup	
Pn816 M2	2	Setting of origin reset mode	0000～0001	-	0000	Effective immediately	Setup	*7

n.□□□X	Origin reversion direction	
	0	Set to forward direction.
	1	Set to reverse direction.
n.□□X□	Appointment parameters (do not change it)	
n.□X□□	Appointment parameters (do not change it)	
n.X□□□	Appointment parameters (do not change it)	

Pn817*8	2	Home reset approach speed 1	0～65535	10000 Command unit/s^2	50	Effective immediately *5	Setup	
Pn818	2	Home reset approach speed 2	0～65535	10000 Command unit/s^2	5	Effective immediately *5	Setup	
Pn819	4	Origin reset final move distance	-1073741823～1073741823	1 Command unit	100	Effective immediately	Setup	
Pn81E M2	2	Input signal monitoring Selection	0000～7777	-	0000	Effective immediately	Setup	*7

n.□□□X	IO-12 allocation	
	0	No distribution
	1	Monitor CN1-IN0 input terminals.
	2	Monitor CN1-IN1 input terminals.
	3	Monitor CN1-IN2 input terminals.
	4	Monitor CN1-IN3 input terminals.
	5	Monitor CN1-IN4 input terminals.
	6	Monitor CN1-IN5 input terminals.
	7	Monitor CN1-IN6 input terminals.
n.□□X□	IO-13 allocation	
	0～7	The allocation is the same as IO-12.
n.□X□□	IO-14 allocation	
	0～7	The allocation is the same as IO-12.
n.X□□□	IO-15 allocation	
	0～7	The allocation is the same as IO-12.

Pn No.	Size	Name	Setting range	Setting Unit	Factory setting	Available time	Category	Remarks
Pn81F M2	2	Allocation command data	0000～1111	-	0010	Power restart	Setup	*7

n.□□□X	OPTION area function allocation	
	0	Invalidates OPTION area function assignment.
	1	Make OPTION area function allocation valid.

n.□□X□	Location control command TFF/TLIM function allocation	
	0	Make allocation invalid.
	1	Make allocation valid.

n.□X□□	Appointment parameters (do not change it)

n.X□□□	Appointment parameters (do not change it)

Pn820	4	Latchable range on forward rotation side	-2147483648～2147483647	1 Command unit	0	Effective immediately	Setup	
Pn822	4	Reversible side lockable range	-2147483648～2147483647	1 Command unit	0	Effective immediately	Setup	
Pn824 M3	2	Option monitoring 1 selection	0000～FFFF	-	0000	Effective immediately	Setup	

Setting value	Monitoring function
High speed surveillance area	
0000H	Motor speed [1000000H/ overspeed detection speed]
0001H	Speed command [1000000H/ overspeed detection speed]
0002H	Torque [1000000H/ maximum torque]
0003H	Position deviation (lower 32 bits) [command unit]
0004H	Position deviation (upper 32 bits) [command unit]
000AH	Encoder count value (lower 32 bits) [command unit]
000BH	Encoder count value (high order 32 bits) [command unit]
000CH	FPG count value (lower 32 bits) [command unit]
000DH	FPG count value (upper 32 bits) [command unit]
Low speed monitoring area	
0010H	Un000: revolving speed of motor [min-1]
0011H	Un001: speed command [min-1]
0012H	Un002: torque command[%]
0013H	Un003: rotation angle 1[encoder pulse] Number of encoder pulses from the origin of encoder 1 circle: 10 decimal display
0014H	Un004: rotation angle 2 [deg] Angle from origin of magnetic pole (electrical angle)
0015H	Un005: input signal Input signal monitoring
0016H	Un006: monitoring of the output signal
0017H	Un007: input command pulse speed [min-1]
0018H	Un008: position deviation [command unit]
0019H	Un009: cumulative load rate [%]
001AH	Un00A: regeneration load rate [%]
001BH	Un00b: DB resistor power consumption [%]
001CH	Un00C: input command pulse counter [command unit]
001DH	Un00D: feedback pulse counter [encoder pulse]
001EH	Un00E: full closed loop feedback pulse counter [external encoder resolution]
0023H	Start turn coil number data "Rev"
0024H	Initial increment data [pulse]
0040H	Un025: servo drive setting environment monitoring
0041H	Un026: servo motor setting environmental monitoring
0042H	Un027: built-in FAN life consumption rate
0043H	Un028: capacitor life consumption rate
0044H	Un029: life consumption rate of anti-impact circuit
0045H	Un02A: DB loop life consumption rate
0046H	Un032: instant power
0047H	Un033: power consumption
0048H	Un034: cumulative power consumption
Communication module only	
0080H	Feedback latch position LPOS1 previous value [encoder pulse]
0081H	Feedback latch position LPOS2 previous value [encoder pulse]
0084H	Continuous latch status(EX STATUS)
Common to all fields	
Beyond the above	Appointment parameters (do not change it)

Pn No.	Size	Name	Setting range	Setting Unit	Factory setting	Available time	Category	Remarks
Pn825	2	Option monitoring 2 selection	0000～FFFF	-	0000	Effective immediately	Setup	

Setting value	Monitoring function
0000H～0084H	Same as option monitoring 1.

Pn827	2	Stop using linear deceleration parameter 1	1～65535	10000 Command unit/s^2	100	Effective immediately *5	Setup	
Pn829	2	SVOFF wait time (when deceleration stops SVOFF)	0～65535	10 ms	0	Effective immediately *5	Setup	
Pn82A M2	2	OPTION bit field function allocation	0000～1E1E	-	1813	Power restart	Setup	*7

n.□□□X	ACCFIL allocation (OPTION)
0	Set ACCFIL to be bits 0 and 1.
1	Set ACCFIL to be bits 1 and 2.
2	Set ACCFIL to be bits 2 and 3.
3	Set ACCFIL to be bits 3 and 4.
4	Set ACCFIL to be bits 4 and 5.
5	Set ACCFIL to be bits 5 and 6.
6	Set ACCFIL to be bits 6 and 7.
7	Set ACCFIL to be bits 7 and 8.
8	Set ACCFIL to be bits 8 and 9.
9	Set ACCFIL to be bits 9 and 10.
A	Set ACCFIL to be bits 10 and 11.
B	Set ACCFIL to be bits 11 and 12.
C	Set ACCFIL to be bits 12 and 13.
D	Set ACCFIL to be bits 13 and 14.
E	Set ACCFIL to be bits 14 and 15.

n.□□X□	Valid/invalid selection of ACCFIL allocation
0	Make ACCFIL bit allocation invalid.
1	Make ACCFIL bit allocation valid.

n.□X□□	Allocation of G_SEL(OPTION)
0～E	The allocation is the same as ACCFIL.

n.X□□□	Valid/invalid selection of G_SEL allocation
0	Make G_SEL bit allocation invalid.
1	Make G_SEL bit allocation valid.

Pn82B M2	2	OPTION area function allocation 2	0000～1F1F	-	1D1C	Power restart	Setup	*7

n.□□□X	V_PPI allocation (OPTION)
0	Set V_PPI to bit 0.
1	Set V_PPI to bit 1.
2	Set V_PPI to bit 2.
3	Set V_PPI to bit 3.
4	Set V_PPI to bit 4.
5	Set V_PPI to bit 5.
6	Set V_PPI to bit 6.
7	Set V_PPI to bit 7.
8	Set V_PPI to bit 8.
9	Set V_PPI to bit 9.
A	Set V_PPI to bit 10.
B	Set V_PPI to bit 11.
C	Set V_PPI to bit 12.
D	Set V_PPI to bit 13.
E	Set V_PPI to bit 14.
F	Set V_PPI to bit 15.

n.□□X□	Valid/invalid selection of V_PPI allocation
0	Make V_PPI bit allocation invalid.
1	Make V_PPI bit allocation valid.

n.□X□□	Allocation of P_PI_CLR(OPTION)
0～F	The allocation is the same as V_PPI.

n.X□□□	Valid/invalid selection of V_PPI allocation
0	Make P_PI_CLR bit allocation invalid.
1	Make P_PI_CLR bit allocation valid.

Pn No.	Size	Name	Setting range	Setting Unit	Factory setting	Available time	Category	Remarks
Pn82C M2	2	OPTION area function allocation 3	0000～1F1F	-	1F1E	Power restart	Setup	*7

n.□□□X	Allocation of P_CL(OPTION)	
	0～F	The allocation is the same as V_PPI.

n.□□X□	Valid/invalid selection of P_CL allocation	
	0	Make P_CL bit allocation invalid.
	1	Make P_CL bit allocation valid.

n.□X□□	Allocation of N_CL(OPTION)	
	0～F	The allocation is the same as V_PPI.

n.X□□□	Valid/invalid selection of N_CL allocation	
	0	Make N_CL bit allocation invalid.
	1	Make N_CL bit allocation valid.

Pn82D M2	2	OPTION area function allocation 4	0000～1F1C	-	0000	Power restart	Setup	*7

n.□□□X	Allocation of BANK_SEL1(OPTION)	
	0	Set BANK_SEL1 to be bits 0～3.
	1	Set BANK_SEL1 to be bits 1～4.
	2	Set BANK_SEL1 to be bits 2～5.
	3	Set BANK_SEL1 to be bits 3～6.
	4	Set BANK_SEL1 to be bits 4～7.
	5	Set BANK_SEL1 to be bits 5～8.
	6	Set BANK_SEL1 to be bits 6～9.
	7	Set BANK_SEL1 to be bits 7～10.
	8	Set BANK_SEL1 to be bits 8～11.
	9	Set BANK_SEL1 to be bits 9～12.
	A	Set BANK_SEL1 to be bits 10～13.
	B	Set BANK_SEL1 to be bits 11～14.
	C	Set BANK_SEL1 to be bits 12～15.

n.□□X□	Valid/invalid selection of BANK_SEL1 allocation	
	0	Make BANK_SEL1 bit allocation invalid.
	1	Make BANK_SEL1 bit allocation valid.

n.□X□□	Allocation of LT_DISABLE(OPTION)	
	0～F	The allocation is the same as V_PPI.

n.X□□□	Valid/invalid selection of LT_DISABLE allocation	
	0	Make LT_DISABLE bit allocation invalid.
	1	Make LT_DISABLE allocation valid

Pn82E M2	2	OPTION area function allocation 4	0000～1F1C	-	0000	Power restart	Setup	*7

n.□□□X	Appointment parameters (do not change it)	

n.□□X□	Appointment parameters (do not change it)	

n.□X□□	Allocation of OUT_SIGNAL(OPTION)	
	0	Set OUT_SIGNAL to be bits 0 ~ 2.
	1	Set OUT_SIGNAL to be bits 1 ~ 3.
	2	Set OUT_SIGNAL to be bits 2 ~ 4.
	3	Set OUT_SIGNAL to be bits 3 ~ 5.
	4	Set OUT_SIGNAL to be bits 4 ~ 6.
	5	Set OUT_SIGNAL to be bits 5 ~ 7.
	6	Set OUT_SIGNAL to be bits 6 ~ 8.
	7	Set OUT_SIGNAL to be bits 7 ~ 9.
	8	Set OUT_SIGNAL to be bits 8 ~ 10.
	9	Set OUT_SIGNAL to be bits 9 ~ 11.
	A	Set OUT_SIGNAL to be bits 10 ~ 12.
	B	Set OUT_SIGNAL to be bits 11 ~ 13.
	C	Set OUT_SIGNAL to be bits 12 ~ 14.
	D	Set OUT_SIGNAL to be bits 13 ~ 15.

n.X□□□	Valid/invalid selection of OUT_SIGNAL allocation	
	0	Make OUT_SIGNAL bit allocation invalid.
	1	Make OUT_SIGNAL bit allocation valid.

Pn No.	Size	Name	Setting range	Setting Unit	Factory setting	Available time	Category	Remarks
Pn833	2	Motion setting	0000～0001	-	0000	Power restart	Setup	-

n.□□□X	Selection of linear acceleration and deceleration parameters	
	0	Pn80A～Pn80F, Pn827 are used. (the settings of Pn834 ~ Pn840 are invalid)
	1	Pn834～ Pn840 are used. (Pn80A～Pn80F, Pn827 setting invalid)
n.□□X□	Appointment parameters (do not change it)	
n.□X□□	Appointment parameters (do not change it)	
n.X□□□	Appointment parameters (do not change it)	

Pn No.	Size	Name	Setting range	Setting Unit	Factory setting	Available time	Category	Remarks
Pn834	4	Section 1 linear acceleration parameter 2	1～20971520	10000 Command unit/s^2	100	Effective immediately *5	Setup	
Pn836	4	Section 2 linear acceleration parameter 2	1～20971520	10000 Command unit/s^2	100	Effective immediately *5	Setup	
Pn838	4	Accelerating parameter switching speed 2	0～2097152000	1 Command unit /s	0	Effective immediately *5	Setup	
Pn83A	4	Section 1 linear deceleration parameter 2	1～20971520	10000 Command unit/s^2	100	Effective immediately *5	Setup	
Pn83C	4	Section 2 linear deceleration parameter 2	1～20971520	10000 Command unit/s^2	100	Effective immediately *5	Setup	
Pn83E	4	Deceleration parameter switching speed 2	0～2097152000	1 Command unit /s	0	Effective immediately *5	Setup	
Pn840	4	Stop using linear deceleration parameter 2	1～20971520	10000 Command unit/s^2	100	Effective immediately *5	Setup	
Pn842*8	4	Home reset approach speed 1 2nd	0～20971520	100 Command unit/s	0	Effective immediately *5	Setup	
Pn844	4	Home reset approach speed 2 2nd	0～20971520	100 Command unit/s	0	Effective immediately *5	Setup	
Pn846	2	POSING command S word acceleration/deceleration ratio	0～50	1%	0	Effective immediately *5	Setup	-
Pn850	2	Latch sequence number	0～8	-	0	Effective immediately	Setup	
Pn851	2	Number of consecutive latch sequences	0～255	-	0	Effective immediately	Setup	
Pn852	2	Latch sequence control 1-4 setting	0000～3333	-	0000	Effective immediately	Setup	

n.□□□X	Rotation direction selection	
	0	C Phase
	1	EXT 1 signal
	2	EXT 2 signal
	3	EXT 3 signal
n.□□X□	Latch sequence 2 signal selection	
	0～3	Same as latch sequence control 1 signal selection.
n.□X□□	Latch sequence 3 signal selection	
	0～3	Same as latch sequence control 1 signal selection.
n.X□□□	Latch sequence 4 signal selection	
	0～3	Same as latch sequence control 1 signal selection.

Pn No.	Size	Name	Setting range	Setting Unit	Factory setting	Available time	Category	Remarks
Pn853	2	Latch sequence control 5-8 setting	0000～3333	-	0000	Effective immediately	Setup	-

n.□□□X	Latch sequence 5 signal selection	
	0	C Phase
	1	EXT 1 signal
	2	EXT 2 signal
	3	EXT 3 signal
n.□□X□	Latch sequence 6 signal selection	
	0～3	Same as latch sequence control 5 signal selection.
n.□X□□	Latch sequence 7 signal selection	
	0～3	Same as latch sequence control 5 signal selection.
n.X□□□	Latch sequence 8 signal selection	
	0～3	Same as latch sequence control 5 signal selection.

Pn No.	Size	Name	Setting range	Setting Unit	Factory setting	Available time	Category	Remarks
Pn860 M3	2	SVCMD_IO (input signal monitoring) Distribution function 1	0000～1717	-	0000	Effective immediately	Setup	

n.□□□X	Allocation of input signal monitoring for CN1-IN0 (SVCMD_IO)	
	0	Set CN1-13 input signal monitoring to bit 24 (IO_STS1).
	1	Set CN1-13 input signal monitoring to bit 25 (IO_STS2).
	2	Set CN1-13 input signal monitoring to bit 26 (IO_STS3).
	3	Set CN1-13 input signal monitoring to bit 27 (IO_STS4).
	4	Set CN1-13 input signal monitoring to bit 28 (IO_STS5).
	5	Set CN1-13 input signal monitoring to bit 29 (IO_STS6).
	6	Set CN1-13 input signal monitoring to bit 30 (IO_STS7).
	7	Set CN1-13 input signal monitoring to bit 31 (IO_STS8).

n.□□X□	Valid/Invalid Selection of Input Signal Monitoring for CN1-IN0	
	0	Make CN1-IN0 input terminal bit allocation invalid.
	1	Make CN1-IN0 input terminal bit allocation valid.

n.□X□□	Allocation of input signal monitoring for CN1-IN1 (SVCMD_IO)	
	0～7	The allocation is the same as CN1-IN0.

n.X□□□	Valid/Invalid Selection of Input Signal Monitoring for CN1-IN1	
	0	Make CN1-IN1 input terminal bit allocation invalid.
	1	Make CN1-IN1 input terminal bit allocation valid.

Pn861 M3	2	SVCMD_IO (input signal monitoring) Distribution function 2	0000～1717	-	0000	Effective immediately	Setup	

n.□□□X	Allocation of input signal monitoring for CN1-IN2 (SVCMD_IO)	
	0～7	The allocation is the same as CN1-IN0.

n.□□X□	Valid/Invalid Selection of Input Signal Monitoring for CN1-IN2	
	0	Make CN1-IN2 input terminal bit allocation invalid.
	1	Make CN1-IN2 input terminal bit allocation valid.

n.□X□□	Allocation of input signal monitoring for CN1-IN3 (SVCMD_IO)	
	0～7	The allocation is the same as CN1-IN0.

n.X□□□	Valid/Invalid Selection of Input Signal Monitoring for CN1-IN3	
	0	Make CN1-IN3 input terminal bit allocation invalid.
	1	Make CN1-IN3 input terminal bit allocation valid.

Pn862 M3	2	SVCMD_IO (input signal monitoring) Distribution function 3	0000～1717	-	0000	Effective immediately	Setup	

n.□□□X	Allocation of input signal monitoring for CN1-IN4 (SVCMD_IO)	
	0～7	The allocation is the same as CN1-IN0.

n.□□X□	Valid/Invalid Selection of Input Signal Monitoring for CN1-IN4	
	0	Make CN1-IN4 input terminal bit allocation invalid.
	1	Make CN1-IN4 input terminal bit allocation valid.

n.□X□□	Allocation of input signal monitoring for CN1-IN5 (SVCMD_IO)	
	0～7	The allocation is the same as CN1-13.

n.X□□□	Valid/Invalid Selection of Input Signal Monitoring for CN1-IN5	
	0	Make CN1-IN5 input terminal bit allocation invalid.
	1	Make CN1-IN5 input terminal bit allocation valid.

Pn863 M3	2	SVCMD_IO (input signal monitoring) Distribution function 4	0000～1717	-	0000	Effective immediately	Setup	

n.□□□X	Allocation of input signal monitoring for CN1-IN6 (SVCMD_IO)	
	0～7	The allocation is the same as CN1-IN0.

n.□□X□	Valid/Invalid Selection of Input Signal Monitoring for CN1-IN6	
	0	Make CN1-IN6 input terminal bit allocation invalid.
	1	Make CN1-IN6 input terminal bit allocation valid.

n.X X□□	Appointment parameters (do not change it)

Pn No.	Size	Name	Setting range	Setting Unit	Factory setting	Available time	Category	Remarks
Pn868 M3	2	SVCMD_IO (output signal monitoring) Distribution function 1	0000～1717	-	0000	Effective immediately	Setup	

n.□□□X	Distribution of output signal monitoring for CN1-OUT1 (SVCMD-IO)	
	0	Set CN1-OUT1 output terminal monitoring to D24 (IO1_ STS1).
	1	Set CN1-OUT1 output terminal monitoring to D25 (IO1_ STS1).
	2	Set CN1-OUT1 output terminal monitoring to D26 (IO1_ STS1).
	3	Set CN1-OUT1 output terminal monitoring to D27 (IO1_ STS1).
	4	Set CN1-OUT1 output terminal monitoring to D28 (IO1_ STS1).
	5	Set CN1-OUT1 output terminal monitoring to D29 (IO1_ STS1).
	6	Set CN1-OUT1 output terminal monitoring to D30 (IO1_ STS1).
	7	Set CN1-OUT1 output terminal monitoring to D31 (IO1_ STS1).

n.□□X□	Output signal monitoring selection for CN1-OUT1	
	0	Make CN 1-OUT1 output terminal monitoring allocation invalid.
	1	Make CN1 - OUT1 output terminal monitoring allocation valid.

n.□X□□	Distribution of output signal monitoring for CN1-OUT2 (SVCMD-IO)	
	0～7	The allocation is the same as CN1-OUT1.

n.X□□□	Output signal monitoring selection for CN1-OUT2	
	0	Make CN 1-OUT2 output terminal monitoring allocation invalid.
	1	Make CN1 - OUT2 output terminal monitoring allocation valid.

Pn869 M3	2	SVCMD_IO (output signal monitoring) Distribution function 2	0000～1717	-	0000	Effective immediately	Setup	

n.□□□X	Distribution (SVCMD-IO)of output signal monitoring for CN1-OUT3	
	0～7	The allocation is the same allocation of CN1-OUT1.

n.□□X□	Output signal monitoring selection for CN1-OUT3	
	0	Make CN1-OUT3 output terminal monitoring allocation invalid.
	1	Make CN1 - OUT3 output terminal monitoring allocation valid.

n.□X□□	Appointment parameters (do not change it)

n.X□□□	Appointment parameters (do not change it)

Pn882	2	Transmission cycle setting monitoring [0.25 μs] (for maintenance, viewing only)	0～FFFF	-	0	Effective immediately	Setup	-
Pn883	2	Communication cycle setting monitoring [xTransmission period] (for maintenance, viewing only)	0～32	-	0	Effective immediately	Setup	-
Pn884 M3	2	Communication control 2	0000～0001	-	0000	Effective immediately	Setup	

n.□□□X	Setting of brake signal in abnormal MECHATROLINK communication	
	0	When MECHATROLINK communication is abnormal, the set state is maintained through BRK _ ON and BRK _ OFF commands.
	1	When MECHATROLINK communication is abnormal, set the brake to active.

n.□□X□	Appointment parameters (do not change it)

n.□X□□	Appointment parameters (do not change it)

n.X□□□	Appointment parameters (do not change it)

*1. Percentage relative to rated torque of motor.

*2. Generally set to "0". The capacity value (W) of the regenerative resistor is set when the external regenerative resistor is used.

*3. The upper limit value is the maximum output capacity (W) applicable to servo drive.

*4. Valid parameters only for MECHATROLINK-III standard servo configuration file.

*5. SENS_ON takes effect.

*6. Changes in actions will affect command output, so please change in the state of command stop (DEN=1).

*7. The value is updated only when the command is stopped (DEN=1).

*8. Parameters valid only when MECHATROLINK-II is compatible with configuration files.

Chapter 11 Operation of Debugging Software (iWatch+)

The following functions can be realized online by using the upper computer software (iWatch+):
• Parameter management: parameter setting and adjustment
• State monitoring: monitoring the working state and relevant data of the servo system
• Tracking: tracking the servo power supply, command, output current and other related data
• Auxiliary debugging: realize various functions of online auxiliary debugging servo with upper computer

11.1 Connection and login of iWath+ debugging software

1. Install iWatch+ debugging software on PC

2. The PC is connected to the Mini USB interface on the servo driver panel operator through a USB connection line. The communication interface is shown in the right figure.

3. After the communication lines are correctly connected, execute iWatch+ debugging software (icon) on iWatch+ the PC.
   After displaying the [User Login] window, click the [Search] button (Figure 1).
   (Two-axis drive selects slave station addresses 1 ~ 2, and the searched address 1 is the drive A axis and address 2 is the drive B axis)
4. After the [Connect] window is displayed, select the searched drive address 1 or address 2, and then click the [Connect] button (Figure 2).
5. The [system monitoring] shortcut window (Figure 3) and the [iWatch+] debugging window (Figure 4) will be displayed after successful connection.

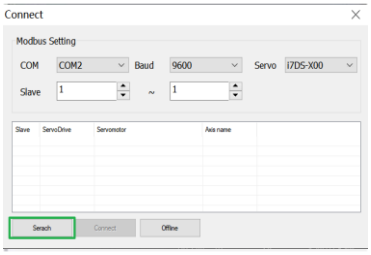

Figure 1

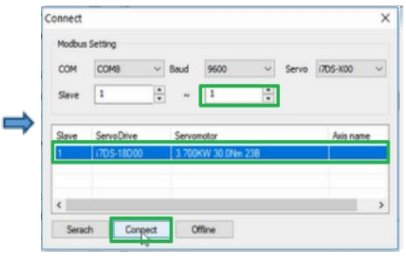

Figure 2

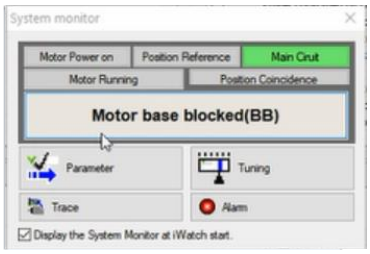

Figure 3

At this time, iWatch+ debugging software is successfully connected.
•In the [iWatch+] debugging window, various states of servo can be selectively monitored in each window.
•In the menu bar of the [iWatch+] debugging window, you can click the shortcut button for debugging to enter the debugging interface.

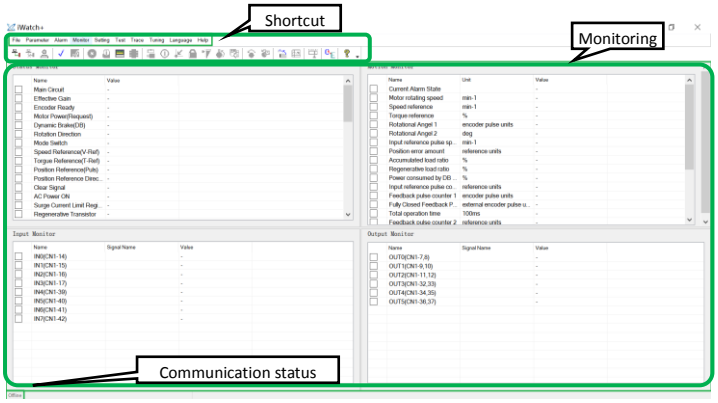

11.2 Automatic adjustment (no upper command)

Automatic adjustment (no upper command) refers to the function that the servo unit performs automatic operation (reciprocating motion of forward rotation and reverse rotation) without issuing a command from the upper device and adjusts according to mechanical characteristics during operation.
The automatic adjustment items are as follows.
• Moment of inertia ratio
• Gain adjustment (speed loop gain, position loop gain, etc.)
• Filter adjustment (torque command filter, notch filter)
• Friction compensation
• Type A vibration suppression control
• Vibration abatement

The following describes the adjustment of automatic adjustment (no upper command).

- The automatic adjustment (without a bit command) is based on the set speed loop gain (Pn100). If vibration occurs at the beginning of the adjustment, the correct adjustment cannot be made. Please reduce the speed loop gain (Pn100) until it stops vibrating and adjust.
- When the adjustment-free function is valid (Pn170 = n. □□□1 [factory setting]), automatic adjustment (no upper command) cannot be performed. Please set the adjustment-free function to invalid (Pn170 = n. □□□0) and adjust.
- After performing the automatic adjustment (without the upper command), change the load state of the machine or the transmission mechanism, etc. When setting the "Estimated Moment of Inertia" again to perform the automatic adjustment (without the upper command), please set the following parameters. If the automatic adjustment is performed in a state other than the following (no upper command), mechanical vibration and mechanical damage may be caused.

  Pn140 = n.□□□ 0 (without model tracking control)
  Pn160 = n.□□□ 0 (type a vibration suppression control is not used)
  Pn408=n.00□0 (no friction compensation, 1st and 2nd notch filters used)
  (Note) If the above parameters are not displayed when using the digital operator, please select the settings (PN00B = n. □□□ 1) to display all parameters and switch on the power again.

■ Confirmation before execution

Be sure to confirm the following settings before performing the automatic adjustment (no upper command).

- The main circuit power supply must be ON.
- No over-travel is allowed.
- Must be in servo OFF state.
- Not for torque control.
- The gain switch selection switch must be manual gain switch (Pn139 = n. □□□0).
- Gain 1 must have been selected.
- No motor test function selection must be invalid (Pn00C = n. □□□0).
- No alarm or warning shall be generated.
- Hardware Base Blocking (HWBB) function must be invalid.
- The write inhibit setting of the parameter must not be set to "write inhibit"
- The adjustment-free function must be set to invalid (Pn170=n.□□□0) or "estimated moment of inertia" when the adjustment-free function is set to valid (Pn170 = n. □□□1)
- The mode selection must be set to 1 when executing in the state of speed control

□

■ Operating Steps

1. Confirm that the rotational inertia ratio (Pn103) has been correctly set.
2. Connect the servo driver and click the "Tune" button in the working area of the iWatch+ [System Detection] window (Figure 5).
   Or click the tune shortcut button (icon) from the shortcut menu of the [iWatch+] debug window.
3. Enter the [Tuning] window and click the [Execute] button (Figure 6).
4. Enter the [Tuning Axis] window (Figure 7)

Select the [Auto Tuning] group
Select [No Reference Input]
Click the [Auto Tuning] button

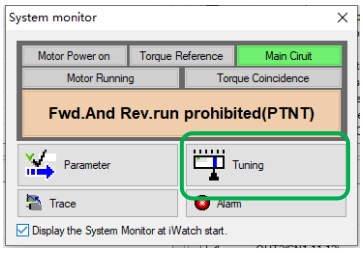

Figure 5

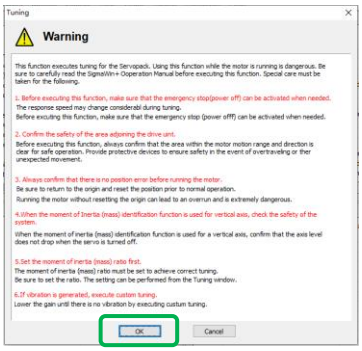

Figure 6

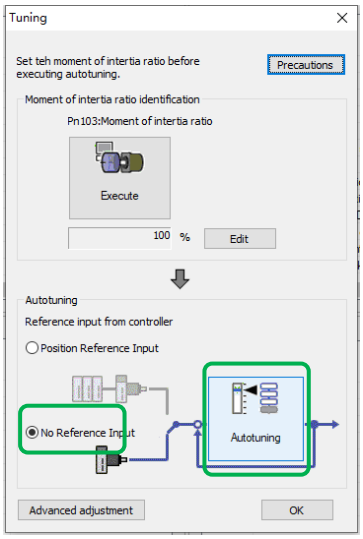

Figure 7

5. Enter the [Auto Tuning Setting Conditions] window (Figure 8)

   Set separately
   - [Select Load Moving Inertia Marker] Column
   - [Mode Selection] Column
   - [Institutional choice] column
   - [Distance] column
   - [Tuning Parameters] column

   Then click [Next]

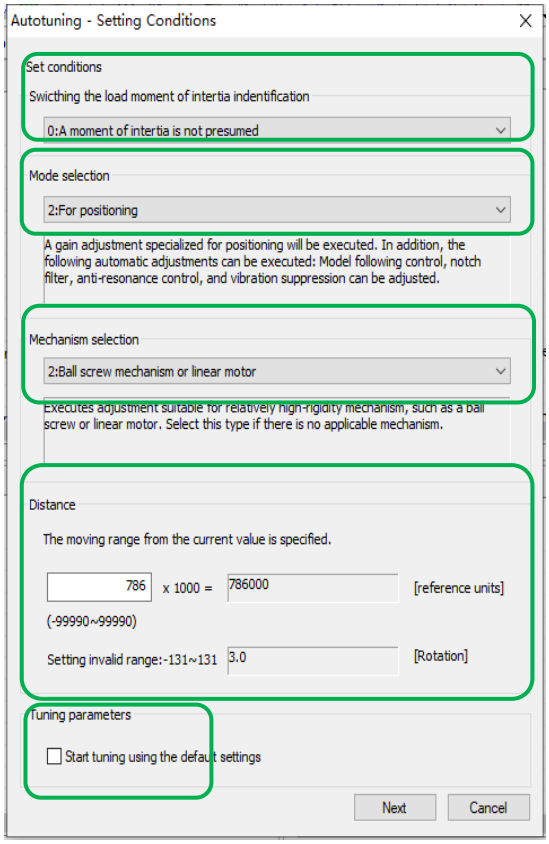

Figure 8

• Tuning parameters
Specify the adjustment parameters to use.
If the [Start Tuning with Default] check box is checked, the adjustment will be performed after the adjustment parameters return to the factory state.

• Select the load movement inertia mark
0: No estimation of moving inertia [factory setting]
1. Estimated moment of inertia

Selection pattern

Selection pattern	Description
1: Standard	Make standard gain adjustments. In addition to gain adjustment, notch filter and Type A vibration suppression are automatically adjusted.
2: Location	Make special adjustment for positioning purpose. In addition to gain adjustment, model tracking control, notch filter, type A vibration suppression and vibration suppression are also automatically adjusted.
3: Location (Pay attention not to overshoot)	In the positioning application, it is necessary to pay attention to the adjustment without overshoot. In addition to gain adjustment, notch filter, type A vibration suppression and vibration suppression are automatically adjusted.

• Institutional choice

Institutional choice	Description
1. Belt transmission mechanism	Adjustments suitable for less rigid mechanisms such as belt mechanisms are made.
2. Ball screw mechanism or linear servo mechanism	The adjustment is suitable for high rigidity mechanisms such as ball screw mechanisms or linear servo motors. Please select this type when there is no corresponding organization.
3. Rigid body mechanism	Adjust the mechanism with higher rigidity such as rigid body system.

• Distance
Set the moving distance.
Movement Range:-99990000 ~+99990000 [Command Unit]
Minimum setting scale for moving distance: 1000 [command unit]
Initial settings value:
The rotary servo motor rotates about 3 times.
Directly drive the servo motor for about 0.3 coils
Linear servo motor approx. 90mm
Please set the value above the following value. In addition, in order to ensure the adjustment accuracy, it is recommended to set the moving distance around the initial set value.
The rotary servo motor rotates 0.5 coils.
Directly drive the servo motor for 0.05 coils
Linear servo motor 5mm

6. Enter the [Auto Tuning] window

Click the [Servo On] button (icon) to energize the servo motor.

Next, click the [Start Tuning] button (icon) to rotate the servo motor and perform adjustment.

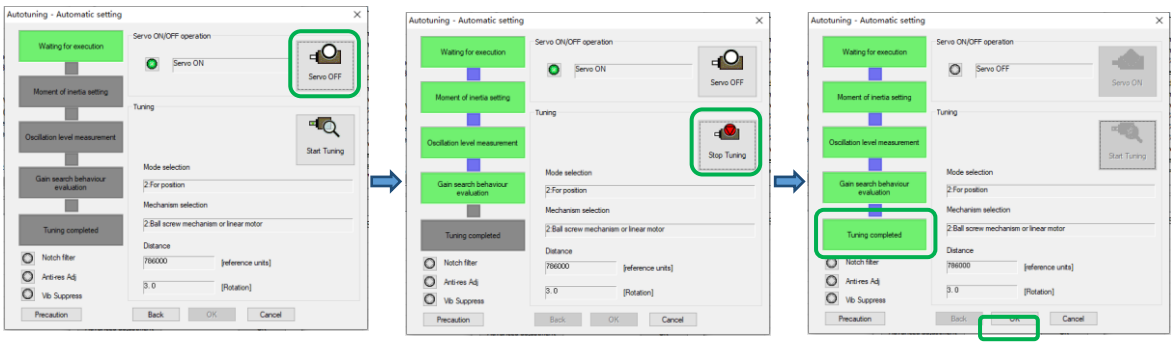

The vibration generated in the adjustment is automatically detected and the generated vibration is optimally set.

The executed function frame will light up after the setting is completed

7. Click the [Finish] button to return to the [Tuning Axis] window after tuning is completed.

Then, the operation of automatic adjustment (no upper command) is completed.

Motor code is written to encoder EEROM operation（FA301）

Step	Display	Key	Operation
1	FA010	▼	Press the left button and UP button to display "FA010".
2	P.0000	S	Press the S key, the display content is shown on the left.
3	P.0010	◀ ▲	Press the left button and UP button to enter the advanced authority P.0010.
4	P.0010	F	Press F to confirm the setting. After the setting is completed, “donE” flashes and returns to the display on the left.
5	FA010	S	Press the S key to return to the "FA010" display.
6	FA301	◀ ▲	Press the left button and the UP button to display "FA301".
7	H6638	S	Press the S key, the display content is shown on the left.
8	H6911	◀ ▲ ▼	Set the correct motor code according to the actual model of the current motor.
9	donE	◀	Press and hold the left button until "doing" is displayed; when "done" flashes, it means that the motor code has been successfully written.
10	FA301	S	Press the S key to return to the "FA301" display.
11	Need to restart PSD-A for all settings to take effect		

Motor zero position check and reset operation （FA300）

Step	Display	Key	Operation
1	Perform this operation, the motor must without load! ! !		
2	FA000	F	Press F to select auxiliary function.
3	FA011	▲ ▼	Press the UP or DOWN key to display "FA011".
4	0.6910	S	Press the S key, the display content is as shown on the left, "0.6910" means the current motor code, if the code is inconsistent with the current connected motor, Please correct it by FA301 (Operation of motor code written into encoder EEROM) or manually set motor code by parameter.
5	FA011	S	Press S again to return to "FA011" display.
6	Make sure that the current motor code of the servo drive is the same as the motor code of the actual operating motor, otherwise do not perform the subsequent steps! ! !		
7	FA010	▼	Press the DOWN key to display "FA010".
8	P.0000	S	Press the S key, the display content is shown on the left.
9	P.0010	◀ ▲	Press the left button and UP button to enter the advanced authority P.0010.
10	P.0010	F	Press F to confirm the setting. After the setting is completed, “donE” flashes and returns to the display on the left.
11	FA010	S	Press the S key to return to the "FA010" display.
12	FA300	◀ ▲	Press the left button and the UP button to display "FA300".
13	drG	S	Press the S key, the display content is shown on the left.
14	P 218	F	Press the F key to start the magnetic pole zero search. At this time, the motor starts to rotate slowly, and the electrical angle of the motor is displayed in real time.Note: The rotating motor must rotate counterclockwise, otherwise the C50 alarm will appear, please confirm the UVW wiring is correct.
15	P 358		After waiting for the motor to stop, the current display "358" is the motor pole zero angle.
16	If you only want to check the motor pole angle, press S to exit; if you need to clear the motor pole zero angle to the zero degree position, you can perform the following operations! !		
17	FinSH	◀	Press and hold the left button until the digital tube displays "FiniSH", and the current motor pole zero angle is set to zero.
18	FA300	S	Press the S key to return to the "FA300" display.
19	Need to restart PSD-A for all settings to take effect		